INSTALLATION AND USER GUIDE

EN

WOOD-BURNING
STOVE

STUB

oyster

over night

Translation of original instructions

MCZ

8901227200

TABLE OF CONTENTS

INTRODUCTION

Dear Customer,
Thank you for having chosen a product from our Wood-burning range.
Products built with Oyster technology, where appropriately installed, due to their fully watertight structure, do not consume the oxygen inside the room. Instead, they draw air from the outside environment and can therefore be fitted in all well-insulated homes and in passive houses. This technology eliminates all risks of smoke being released into the room and ventilation grilles are no longer required. Consequently, there will be no more flows of cold air in the room, which make it less comfortable and compromise the overall efficiency of the system.
The sealed product can be installed in the case of forced ventilation or in a room in which there may be a negative pressure compared to outside.
To allow for optimal product operation and for you to enjoy the warmth and sense of wellbeing that the fire can convey in your home, we advise you to read this manual carefully before starting up the product for the first time.

REVISIONS TO THE PUBLICATION

The content of this manual is strictly technical and property of MCZ Group Spa.
No part of this manual can be translated into another language and/or altered and/or reproduced, even partially, in another form, by mechanical or electronic means, photocopied, recorded or similar, without prior written approval from MCZ Group Spa.
The company reserves the right to make changes to the product at any time without prior notice. The proprietary company reserves its rights according to the law.

CARE OF THE MANUAL AND HOW TO CONSULT IT

- Take care of this manual and keep it in an easily accessible place.
- Should the manual be misplaced or ruined, request a copy from your retailer or directly from the authorised Technical Assistance Department.
- "**Bold text**" requires particular attention.
- "Text in *"italics"* is used to draw your attention to other paragraphs in this manual or any additional explanation.
- "NOTE" provides the reader with additional information.

SYMBOLS USED IN THE MANUAL

	**ATTENTION:** carefully read and understand the relative message because **failure to comply with what is written can cause serious damage to the product and put the user's safety at risk**.
	**INFORMATION:** failure to comply with these provisions will compromise the use of the product.
	**OPERATING SEQUENCES:** sequence of buttons to be pressed to access the menus or make adjustments.
	**MANUAL:** carefully read this manual or the relative instructions.

1-WARNINGS AND WARRANTY CONDITIONS

⚠ SAFETY PRECAUTIONS

- **Installation, functional verification and maintenance must only be performed by qualified or authorised personnel.**
- **Install the product in accordance with Standards in force in the relative place, region or country.**
- **This product is not intended for use by persons (including children) with reduced physical, sensory or mental capabilities, or lack of experience and knowledge, unless they have been given supervision or instruction concerning use of the appliance by a person responsible for their safety.** Errors or incorrect settings can cause hazardous conditions and/or poor operation.
- Only use fuel recommended by the company. The product must not be used as an incinerator. It is strictly forbidden to use liquid fuel.
- The user, or whoever is operating the product, must read and fully understand the contents of this instruction manual before performing any operation.
- Do not use the product as a ladder or supporting structure.
- Do not place laundry on the product to dry. Any clothes horses or similar objects must be kept at a safe distance from the product. **Fire hazard**.
- *All liability for improper use of the product is entirely borne by the user and relieves the Manufacturer from any civil and criminal liability.*
- Any type of tampering or unauthorised replacement with non-original spare parts could be hazardous for the operator's safety and relieve the company from any civil and criminal liability.
- Most of the surfaces of the appliance can get very hot (door, handle, glass, smoke outlet pipes, etc.). **Avoid contact with these parts unless adequate protective clothing is worn or appropriate means are used**, such as heat protective gloves or cold handle type operating systems.
- **It is forbidden to operate the product with the door open or the glass broken.**
- Switch the product off in the event of a fault or malfunctioning.
- Do not wash the product with water.
- Do not stand in front of the product for a long time. Do not overheat the room where the product is installed. This could cause injuries and health problems.
- Do not put any fuel other than wood in the hopper.
- Install the product in rooms that are adequately protected against fire and equipped with all the utilities such as supplies (air and electricity) and smoke outlets.
- If a fire breaks out inside the product, switch it off and never open the door. Then contact the competent authorities.
- The product and the ceramic cladding must be stored in a place where there is no humidity and must not be exposed to the elements.
- It is recommended not to remove the feet that support the product in order to guarantee adequate insulation, especially if the flooring is made of flammable material.
- If the ignition system is faulty, do not force ignition with flammable materials.
- **Special maintenance must only be performed by authorised and qualified personnel.**
- Assess the static conditions of the surface on which the weight of the product will rest and provide suitable insulation if it is made of flammable material (e.g. wood, fitted carpet or plastic).
- Avoid installing the product in rooms containing B-type gas appliances, hoods with or without an extractor, heat pumps or collective ventilation ducts.
- Avoid having several closed fireplaces running at the same time in the room or being close to a stairwell. Furthermore, make sure there are no appliances in interconnected rooms, which when used simultaneously could cause a negative pressure in one of the two rooms.
- The product must be used in accordance with all the local and national laws and European Standards applicable in the relative place, region or country.
- Do not use volatile and/or flammable substances (petrol, alcohol, etc.) to ignite the fire.
- Do not use fuel that could release toxic substances or pollutants.
- Do not use water to put the fire out.
- Check the external-internal air inlet and the product at least once a year and have them cleaned also.

1-WARNINGS AND WARRANTY CONDITIONS

INFORMATION

- Please contact the retailer or qualified personnel authorised by the company to resolve a problem.
- Check and clean the smoke outlet pipes regularly (connection with the product).
- The product is not a cooking appliance.
- Keep this instruction manual in a safe place as it must accompany the product throughout its working life. If it is sold or transferred to another user, always make sure that the manual accompanies the product.

INTENDED USE

The product only works with wood and must be installed indoors.

WARRANTY CONDITIONS

The company provides a product warranty, **excluding the parts subject to normal wear** stipulated below, for a period of **two years** from the date of purchase, which is proven by a supporting document that contains the name of the seller and the date when the sale took place. Warranty cover is valid if the completed warranty is returned within 8 days and the product is installed and tested by a qualified installer, according to the detailed instructions provided in the instruction manual supplied with the product.
The term 'warranty' refers to the (free-of-charge) replacement or repairs of **parts acknowledged to be faulty due to manufacturing defects.**

RESTRICTIONS

The above-mentioned warranty does not cover parts of electrical and electronic components and fans, which are covered for 1 year from when the product is purchased, proof of which is provided as specified above. The warranty does not cover parts subject to normal wear, such as: gaskets, glass and all parts that can be removed from the firebox.
Replaced parts will be covered by the warranty for the remaining period of the warranty in force as from the date of purchase of the product.

EXCLUSIONS

Variations in colour of the painted or ceramic parts and crazed ceramics do not constitute grounds for a claim as they are natural characteristics of the material and product use.
The warranty does not cover any part that may be faulty as a result of negligence or careless use, incorrect maintenance or installation that does not comply with the company's instructions (see the relative chapters in this user manual).
The company declines all liability for any damage which may be caused, directly or indirectly, to persons, animals or objects as a consequence of non compliance with all the prescriptions specified in the instruction manual, especially warnings regarding installation, use and maintenance of the product.
If the product does not work correctly, contact your local retailer and/or importer.
Damage caused during transport and/or when handled is excluded from the warranty.
The supplied manual is the only reference for installation and product use.
The warranty will be rendered null and void in the event of damage caused by tampering, atmospheric agents, natural disasters, electrical discharges, fire, defects in the electrical system and maintenance not being performed at all or as indicated by the manufacturer.

1-WARNINGS AND WARRANTY CONDITIONS

INTERVENTION REQUEST

The company declines all liability if the product and any other accessory is used incorrectly or altered without authorisation.
All parts must be replaced with original spare parts.

The request must be sent to the retailer who will forward it to the Technical Assistance Service.

SPARE PARTS

Only use original spare parts. The retailer or service centre can provide all the useful information regarding spare parts.
It is recommended not to wait for the parts to be worn before having them replaced. It is important to perform regular maintenance.

PRECAUTIONS FOR CORRECT DISPOSAL OF THE PRODUCT IN ACCORDANCE WITH THE EUROPEAN DIRECTIVE 2002/96/EC AND ITS SUBSEQUENT AMENDMENT 2003/108/EC.

At the end of its working life, the product must not be disposed of as urban waste.
It must be taken to a special differentiated waste collection centre set up by the local authorities or to a retailer that provides this service.
Disposing of the product separately prevents possible negative consequences for the environment and health deriving from inappropriate disposal and allows to recycle its materials in order to obtain significant savings in energy and resources.
As a reminder of the need to dispose of appliances separately, the product is marked with a crossed-out wheeled dustbin.

2-INSTALLATION INSTRUCTIONS

The requirements stipulated in this chapter refer to the regulations of the Italian installation Standard UNI 10683. In any case, always comply with the regulations in force in the country of installation.

THE OPERATING ENVIRONMENT

For correct operation and even distribution of heat, the product must be placed where the air required for combustion can flow, in accordance with the installation regulations and the standards in force in the country of installation.

The volume of the installation environment must not be less than 25 m³.

The air must enter through permanent openings in the walls that reach outside with a minimum section of 100 cm² in the case of a non-Oyster installation, i.e. without external ducted combustion air.
These openings must be made in such a way that it is impossible for them to be obstructed in any way.
Air can also be drawn from adjacent rooms to the one that is to be ventilated, provided they have an external air inlet and are not used as a bedroom or bathroom or where there is a fire hazard, such as: garages, timber storerooms, warehouses of flammable materials, observing under all circumstances the provisions of all the applicable standards in force.

- ***If the product is placed too close to the wall it could cause overheating and damage the plaster (yellowing, cracking, etc.).***
- ***The product must be connected to a flue or a vertical duct that can expel the smoke at the highest point of the building.***
- ***The product must be connected to a flue or an internal or external vertical duct in compliance with current regulations.***
- ***The smoke derives from the combustion of wood essence and if it comes in contact with or close to walls, the latter can become dirty.***
- ***The external air inlet must be drilled before positioning the product (except in the case of installation with Oyster technology).***
- ***The floor of the room where the product will be installed must be adequately sized to withstand its weight.***

POSITIONING

In the case of simultaneous installation with other heating appliances, provide appropriate air inlets for each one (according to the instructions of each product).

The product cannot be installed in the following places (except for sealed or closed operation appliances with external ducted combustion air intake):

- ***in bedrooms or bathrooms;***
- ***in rooms where there are liquid fuel appliances with continuous or intermittent operation that draw the combustion air from the room they are installed in;***
- ***in rooms where there are B-type gas heating appliances, with or without domestic hot water production and interconnecting rooms;***
- ***where another heating appliance is installed without an independent air flow.***

It is forbidden to place the product in an explosive atmosphere.

2-INSTALLATION INSTRUCTIONS

SAFE DISTANCES

STUB OVERNIGHT	Non-flammable walls	Flammable walls
	A = 5 cm B = 15 cm	A = 5 cm B = 25 cm

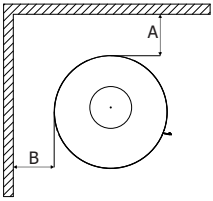

If particularly delicate objects are present, such as furniture, curtains or sofas the distance of the product must be significantly increased.

If the floor is made of wood, it is recommended to place a floor protection in accordance with the Standards in force in the country of installation.

Heat-sensitive or flammable objects cannot be placed near the product. Keep such objects at a minimum distance of 100 cm from the outermost point of the product.

CONNECTING THE COMBUSTION AIR INLET PIPE

The combustion air inlet does not necessarily have to be connected to the outside; this is only required if you wish to use Oyster technology.

Always use pipes and fittings with appropriate seals that guarantee tightness.

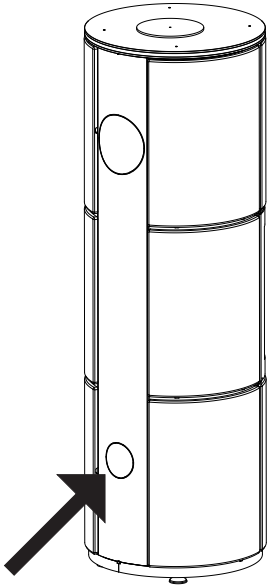

REAR VIEW OF THE PRODUCT.
1) COMBUSTION AIR INLET

Products manufactured with Oyster technology do not consume the oxygen inside the room, thanks to a perfectly sealed structure, but draw all the air from outside and can therefore be installed in any well-insulated home and in passive houses.
In order to satisfy these requirements, the 80 mm diameter smoke duct for the combustion air inlet **must be** connected to the outside of the building.

The product must be connected to the external air inlet with pipes and fittings that guarantee tightness in order to comply with the sealed product requirements (OYSTER technology).

2-INSTALLATION INSTRUCTIONS

OUTDOOR AIR INLET

Drill a hole on the outer wall close to the product with a minimum section of 100 cm^2 (13 cm in diameter or 12x12 cm if square, considering the protective grids), protected by a grid on the outside.

The air inlet must also:

- be protected with grilles, metal mesh, etc. without reducing the net section;
- be positioned in such a way so as not to be obstructed;
- allow maintenance to be performed;
- be directly interconnected with the room where the product is installed;
- in the case of ducting, up to 3.5 linear metres, increase the cross-section by about 5%, whereas for longer ducts, increase it by 15%.

Remember that the ventilation grilles always show the useful section in cm^2 on one side.
When choosing the grille and size of the hole, check that the useful section of the grille is larger or equal to the section required by the manufacturer for product operation.

IMPORTANT!
The air flow can also be drawn from an adjacent room to that of the room where the product is installed, provided the air can flow freely through permanent openings interconnected with the outside; it is forbidden to connect to thermal units, garages, kitchens or bathrooms.

CONNECTION TO THE CHIMNEY

The connection to the closed fireplace is very important and must be implemented carefully. The products have an upper or rear smoke exhaust. The smoke exhaust pipe must be assembled in such a way so as to guarantee its tightness during product operation in negative pressure and prevent condensation from being formed and conveyed towards the product.
Any manual draught control devices inserted in the pipe should not hermetically seal the internal section of the duct. These dampers must be equipped with a suitable mechanism to prevent the valve from rotating completely in the closed position. The minimum safety opening surface must be 3% of the through section and not less than 20 cm^2. If the smoke duct has a horizontal section, the same should rise with a minimum slope gradient of 3-5% (3-5 cm per every metre).

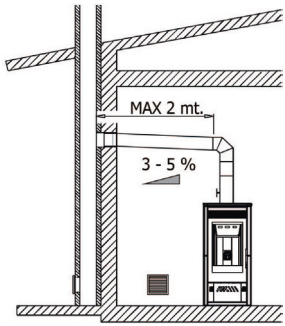

EXAMPLE OF CONNECTION TO THE CHIMNEY

The horizontal section of the smoke duct must not be longer than 2 m.

It is forbidden to use flexible and fibre cement pipes. The smoke duct must not cross rooms in which it is forbidden to install combustion appliances. It is forbidden to use counter-sloping pipes.

CONNECTING THE PRODUCT TO THE CHIMNEY

The smoke outlet pipe is designed by the company for the smoke to be expelled towards the top of the product.
The smoke outlet can be moved and fitted at the back of the product. For STUB stoves, it is necessary to remove the two screws on the collar of the smoke fittings and turn it by 180°, while for STUB Overnight stoves it is necessary to purchase the rear smoke outlet fitting (see next paragraph).
Before installing the refractory kit, insert the optional smoke outlet fitting into the pre-assembled pipe on the product and remove the knockout circle on the rear panel of the product.

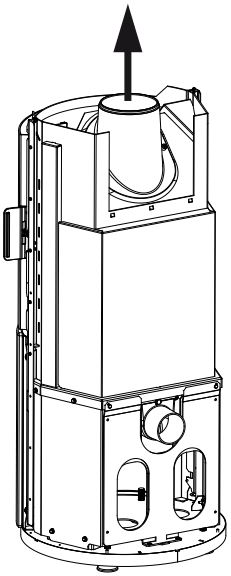

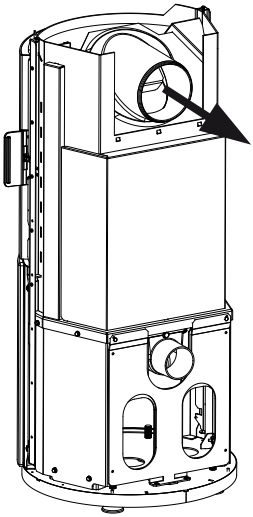

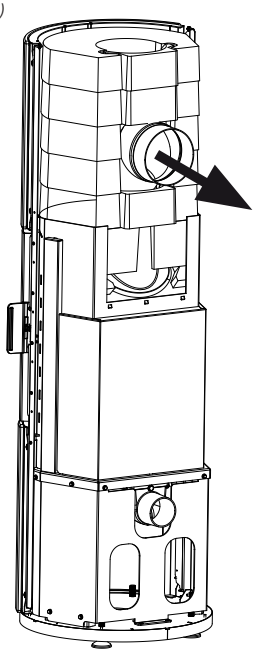

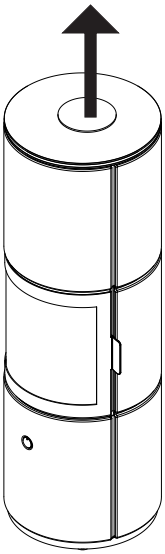

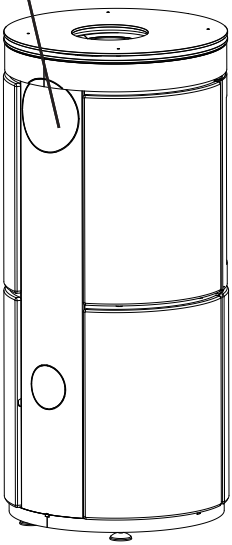

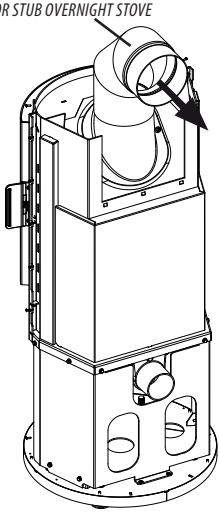

TOP HOLE COVER AND REAR SMOKE OUTLET FITTING (ACCESSORY)

Given the option of moving the rear smoke outlet of the STUB Overnight stove, we created an accessory (available upon request) consisting of the smoke fitting and the top hole cover.
The fitting, as mentioned in the previous paragraph, must be connected to the tube set-up in the product.
The top hole cover must be used in the event the smoke outlet is at the back. It must be applied to the hole designed for the vertical smoke duct.

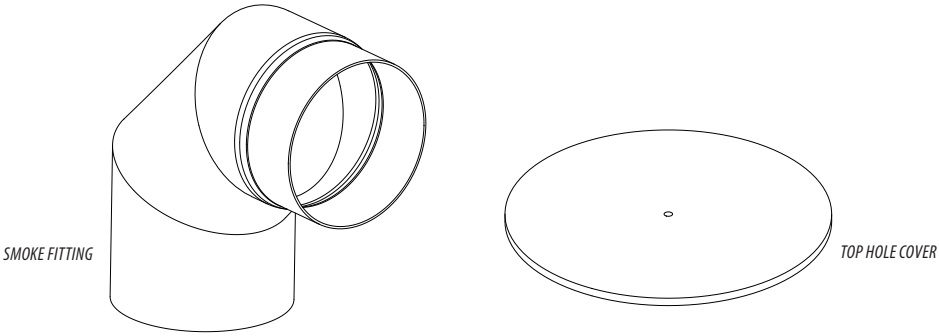

2-INSTALLATION INSTRUCTIONS

CHIMNEY

The chimney is **the fundamental element** for smoke expulsion and must therefore comply with the following requirements:

- be waterproof and thermally insulated.
- Be made of suitable materials that resist mechanical stress over time, heat, the effects of the combustion products and any possible condensation.
- Have a vertical set-up with deviations from the axis of no more than 45° and free of bottlenecks.
- Must be suitable for the specific operating conditions of the product and have the CE marking (EN1856-1, EN1443).
- Must be adequately sized for the draught/smoke expulsion requirements that are necessary for the product to operate correctly (EN13384-1).
- The chimney must not be shared with other appliances.
- The product must be at least category T400 (or higher if required by the smoke temperature of the appliance) and soot-fire resistant. Resistance to moisture is mandatory if this is required by the product size.
- The internal section is preferably circular.
- In the case of a pre-existing product that has been used, it must be cleaned.

The product is fundamental for correct operation and safety of your product.

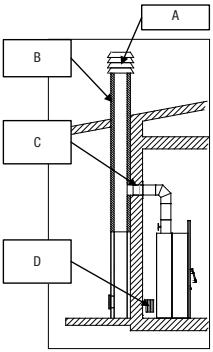

A) CHIMNEY POT
B) CHIMNEY
C) SMOKE DUCT
D) OUTDOOR AIR INLET

TYPICAL CHIMNEY INSTALLED CORRECTLY WITH A CHAMBER WITH SEALED DOOR AT THE FOOT OF THE EXTERNAL RISING SECTION, TO COLLECT AND REMOVE THE SOLID MATERIALS PRODUCED DURING COMBUSTION.

In the event of poor weather conditions for product operation (low pressure, external temperature not particularly harsh, windy day), inverse draught may occur in the product. In this case, it is recommended to use a little paper to ignite the fire to heat the product and restore normal draught. Then proceed with normal product start-up.

EXAMPLES OF CHIMNEYS

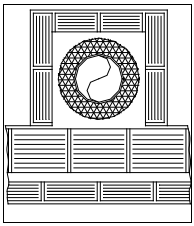

AISI 316 steel product with double chamber insulated with ceramic fibre or similar material, resistant to 400°C.

EXCELLENT

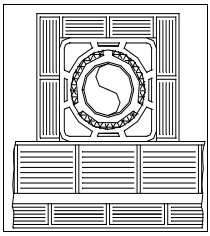

Refractory product with insulated double chamber and external lightweight concrete cladding with cellular material such as clay.

GOOD

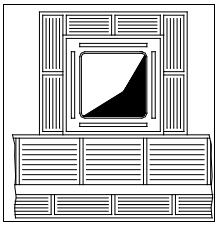

Traditional square-section clay product with insulating empty inserts.

POOR

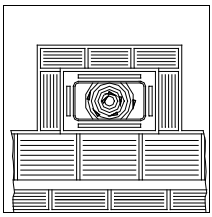

Avoid products with an internal rectangular section where the larger side is 1.5 times the smaller side (such as 20x40 or 15x30).

VERY POOR

For square or rectangular-section chimneys, the internal corners must be rounded with a radius of no less than 20 mm. For a rectangular section, the ratio between internal dimensions must be ≤1.5.
The sections/lengths of the chimneys shown in the technical data table are guidelines for a correct installation. Any alternative configurations must be suitably sized in accordance with the general method of calculation of UNI EN13384-1.
It is recommended for the flue duct to be equipped with a chamber to collect solid materials beneath the opening of the smoke duct, which can be easily opened and inspected through an airtight door.

Should doubts arise regarding product performance or if its dimensions are different from those recommended, you are strongly advised to have an installer, authorised by the manufacturer, perform an inspection and evaluate the performance of the product.
The manufacturer declines all liability regarding product malfunctioning if this is attributable to a product that is badly sized and installation does not comply with the stipulated requirements.

CHIMNEYPOT

Often, if this factor is underestimated it hinders smooth "product system" operation.

The draught of the chimney also depends on its chimneypot.

In the case of an artisan product, it is very important for the four expulsion sections to be **more than twice the internal section of the product.**

The chimneypot will be exposed to the four winds and it is therefore recommended for it to be specifically designed to withstand the elements (e.g. an industrial product).

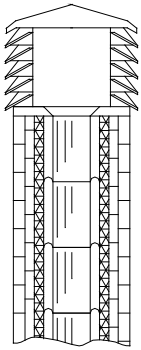

INDUSTRIAL CHIMNEY WITH PREFABRICATED STACKED ELEMENTS. ALLOWS EXCELLENT SMOKE DISPOSAL.

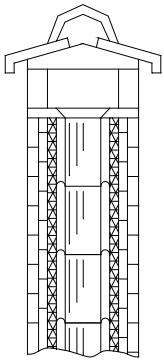

TRADITIONAL HANDCRAFTED CHIMNEY. THE CORRECT EXPULSION SECTION MUST BE AT LEAST TWICE THE INTERNAL SECTION OF THE PRODUCT; IDEALLY 2.5 TIMES ITS SIZE.

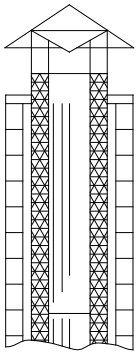

CHIMNEYPOT FOR A STEEL PRODUCT WITH AN INTERNAL CONE AND SMOKE DEFLECTOR. ALLOWS EXCELLENT SMOKE DISPOSAL.

The chimneypot must comply with the following requirements:

- have an internal section equal to that of the product.
- Have a useful outlet section that is at least double that of the internal section of the product.
- Be constructed in such a way so as to prevent rain, snow and any foreign body from entering the product.
- Be positioned so as to ensure adequate smoke dispersion and in any case beyond the reflux area in which counter pressure is likely to form.

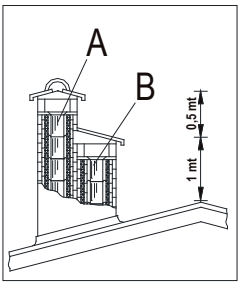

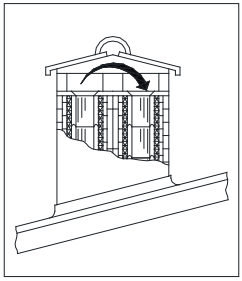

YES
A) UPPER LEVEL OR SOLID COMBUSTIBILITY
B) LOWER LEVEL.

NO

2-INSTALLATION INSTRUCTIONS

In the case of paired products, the solid combustibility or upper storey chimneypot must be at least 50 cm higher than the others in order to prevent the pressure from being transferred between the paired chimneypots.
The chimneypot must not have any obstacles within a range of 10 metres, such as walls, slopes and trees. Otherwise, raise it by at least 1 m above the obstacle and in the case of other chimneypots nearby, leave a gap of at least 2 m. In any case, the chimneypot must exceed the highest point of the roof by at least 100 cm or be above the reflux area, which is equal to 130 cm in roofs with a gradient greater than 10° (height perpendicular to the surface of the roof).

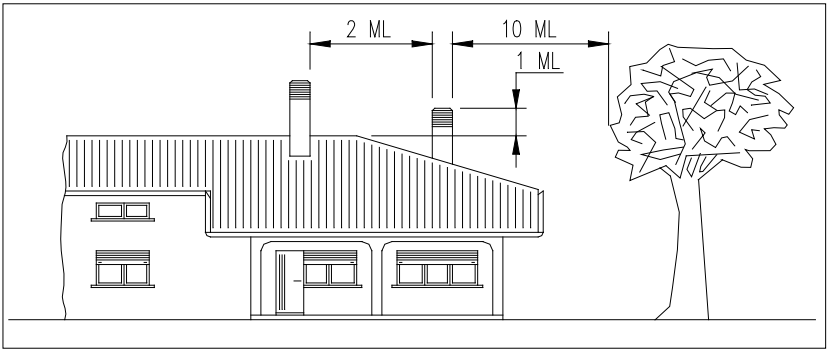

STUFA STUB NATURAL WITH UPPER SMOKE OUTLET

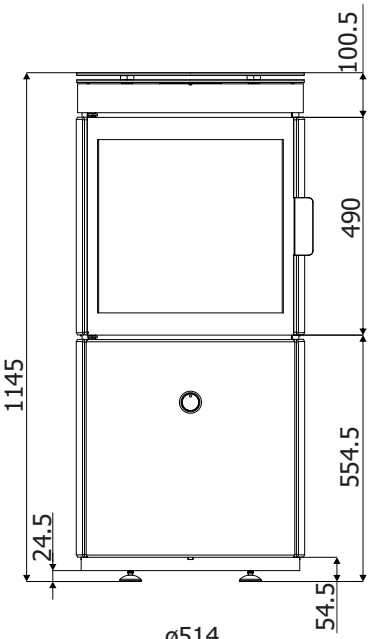

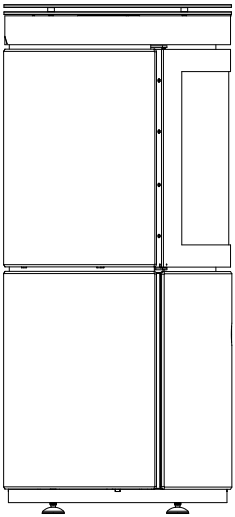

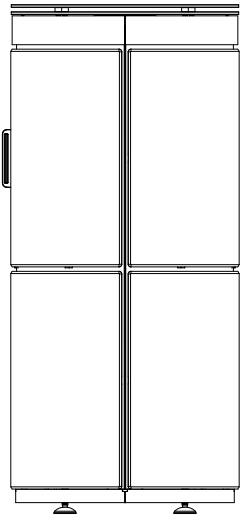

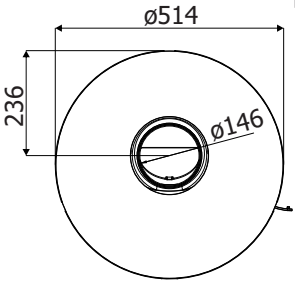

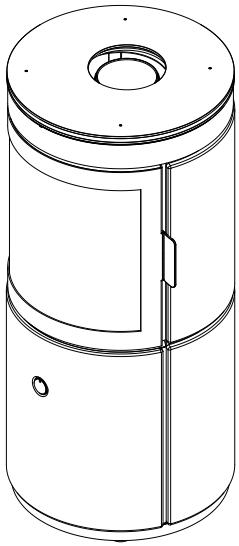

STUFA STUB NATURAL WITH REAR SMOKE OUTLET AND REAR COMBUSTION AIR

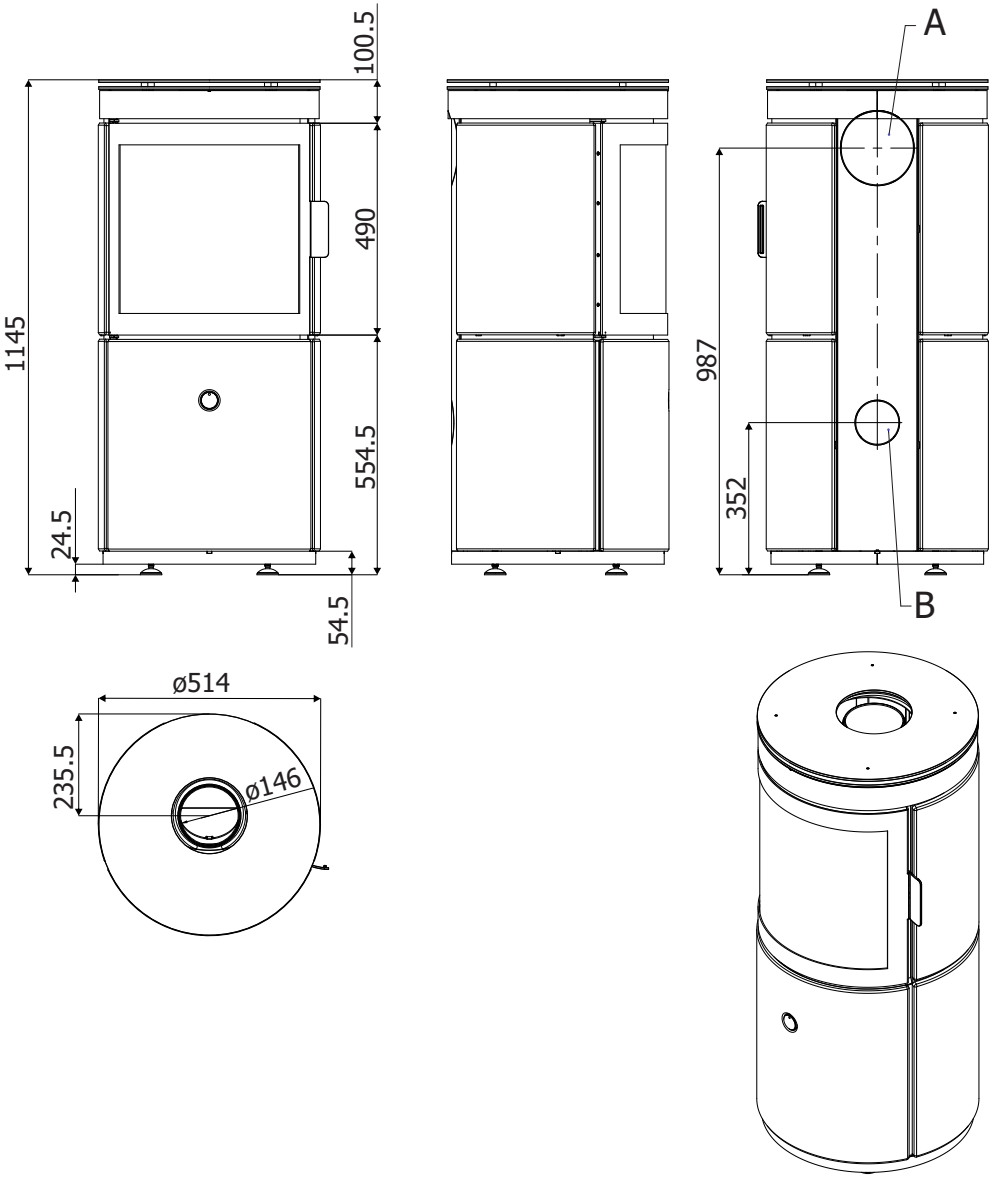

A = KNOCKOUT HOLE FOR 150 PIPE Ø FOR REAR SMOKE OUTLET
B = KNOCKOUT HOLE FOR 80 PIPE Ø FOR AIR INLET

STUFA STUB OVERNIGHT WITH REAR SMOKE OUTLET AND REAR COMBUSTION AIR

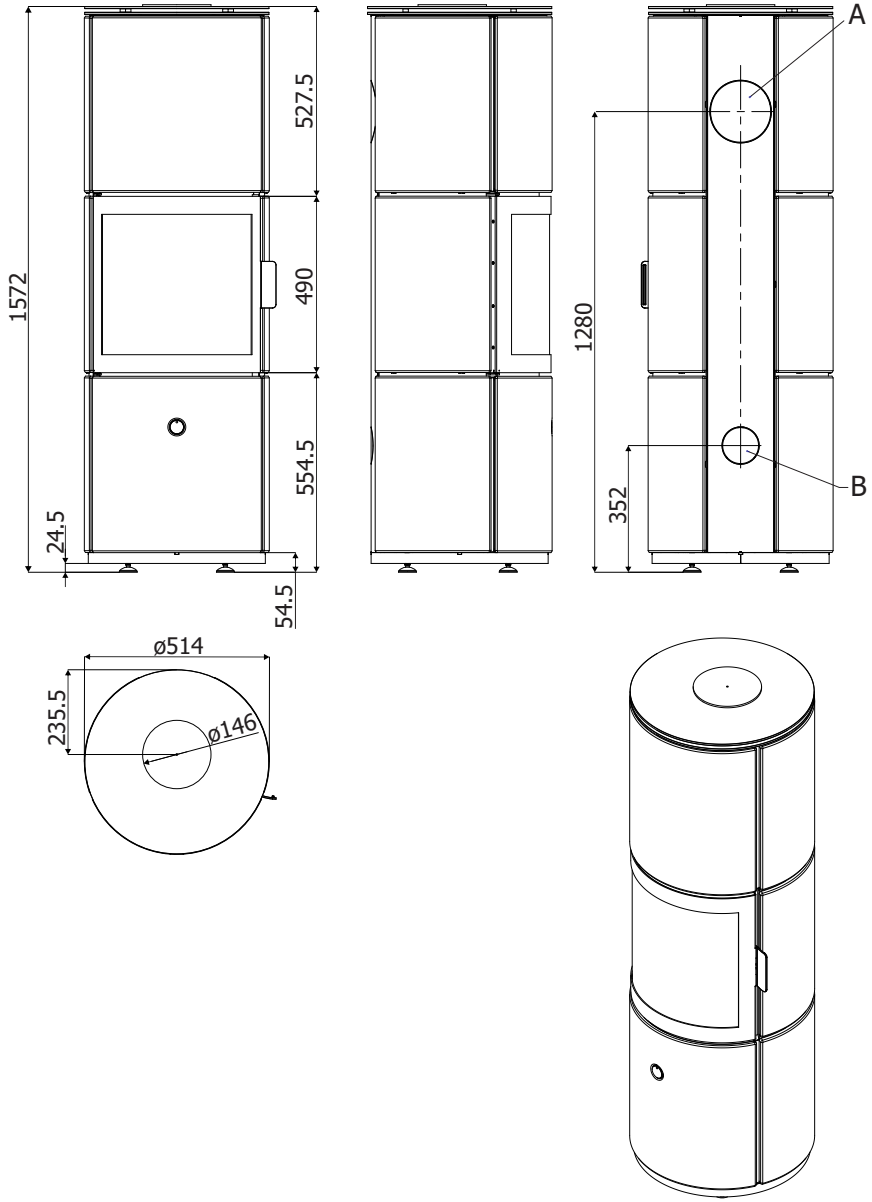

A = KNOCKOUT HOLE FOR 150 PIPE Ø FOR REAR SMOKE OUTLET
B = KNOCKOUT HOLE FOR 80 PIPE Ø FOR AIR INLET

3-DIMENSIONS AND TECHNICAL CHARACTERISTICS

STUFA STUB OVERNIGHT WITH UPPER SMOKE OUTLET

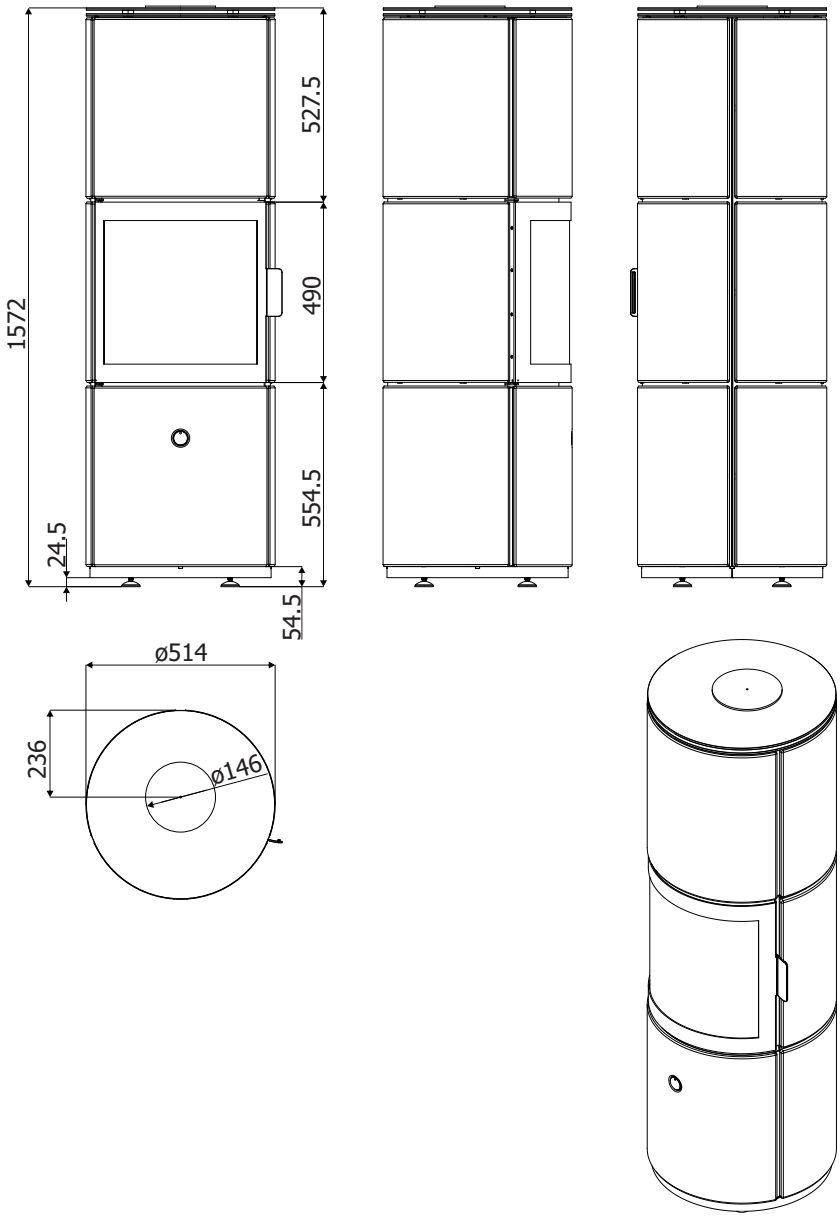

3-DIMENSIONS AND TECHNICAL CHARACTERISTICS

TECHNICAL CHARACTERISTICS	STUB NATURAL/OVERNIGHT
Type of fuel	Wood
Hourly consumption	2.0 kg/h – 0.9 kg/h*
Reloading/load time	45 minuti/1.5 kg*
Nominal output power	kW 7.2 (Kcal/h 6192)
Minimum output power	kW 3.5 (Kcal/h 3010)
Efficiency	83,1%
CO emission in the smoke (13% O_2)	0,09%
Particulate/OGC / Nox (13%O_2)	33.3 mg/Nm^3 - 69 mg/Nm^3 - 115 mg/Nm^3
Smoke flow rate	6.9 g/s
Smoke temperature	230 °C
Recommended draught	12 Pa / 0.12 mbar
Heatable volume m^3	151/40 – 172/35 – 201/30 **
Smoke outlet	Ø 15 cm
Firebox dimensions	H=430 mm P=240 mm L=350 mm
Net weight	140 kg (Stub) /260 kg (Stub Overnight)
External combustion air inlet	100 cm^2
Product	
Up to 5 m	20x30 cm Ø22
Between 5 and 7 m	20x20 cm Ø20
Beyond 7 m	18x18 cm Ø18
Notes	
* * Data that may vary depending on the type of pellets used. **Heatable volume based on the requested power per m3 (respectively 40-35-30 Kcal/h per m3) The stove is an intermittent combustion appliance.	

Tested according to EN 13240 in accordance with Directive 89/106/EC (Construction Products).

4-INSTALLATION AND ASSEMBLY

IMPORTANT!
The product must be installed and connected to the product by a qualified technician or competent personnel in order for all local or national regulations to be complied with and in any case in accordance with UNI 10683.

When the product and the relative frame are unpacked, verify that every part is in perfect working order and no damage has been caused during transport. If the product is installed in a place that is difficult to access, the weight can be reduced by removing the internal elements of the firebox. It is recommended to reposition each element correctly.

PREPARATION AND UNPACKING

The product is supplied on pallets with various packaging.

- One contains the structure of Fig. 1.
- A pallet containing the refractory parts, a cardboard box with the sides, a box with the ceramics and a box with the top Fig.2/3.

Open the package and remove the boxes. Once the package is open, remove the two brackets that block the product to the pallet (Fig.4). Remove the two **screws A**and the other three **screws B** that block the bracket to the pallet and set the product in the pre-selected place, making sure this complies with the requirements.

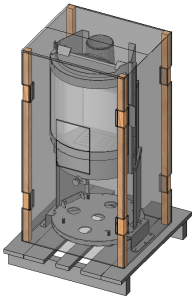

FIG. 1 - STUB STRUCTURE PACKAGE

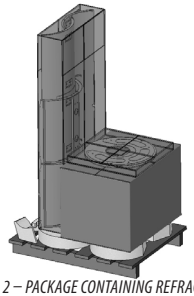

FIG. 2 – PACKAGE CONTAINING REFRACTORY PARTS AND BOX WITH SIDES, CERAMICS AND TOP (STUB OVERNIGHT)

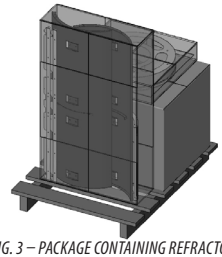

FIG. 3 – PACKAGE CONTAINING REFRACTORY PARTS AND BOX WITH SIDES, CERAMICS AND TOP (STUB)

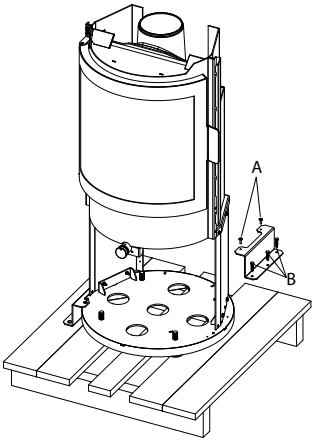

FIG. 4 - REMOVING THE PACKAGE SCREWS

4-INSTALLATION AND ASSEMBLY

The product must always be handled in a vertical position and solely with a cart. Pay particular attention to the door and its glass, protecting them from mechanical knocks that would compromise their integrity.
Always handle the product with care. If possible, unpack the product near the place of installation.
The packaging materials are neither toxic nor harmful, and therefore no particular disposal measures are required. Storage, disposal or any recycling is under the responsibility of the end user in compliance with the applicable laws in force.

ASSEMBLING AND ADJUSTING THE FEET

The product requires the support feet to be assembled, whose function is to adjust the product level so that it is aligned and stable on the ground. The feet are screwed to the base of the structure and they can be installed as shown in the figure and adjusted with a spanner by acting on the base of the feet.
For an effective closing function of the doors, adjust the feet so that there is a difference of 2 mm between the front and rear of the base (see figure).

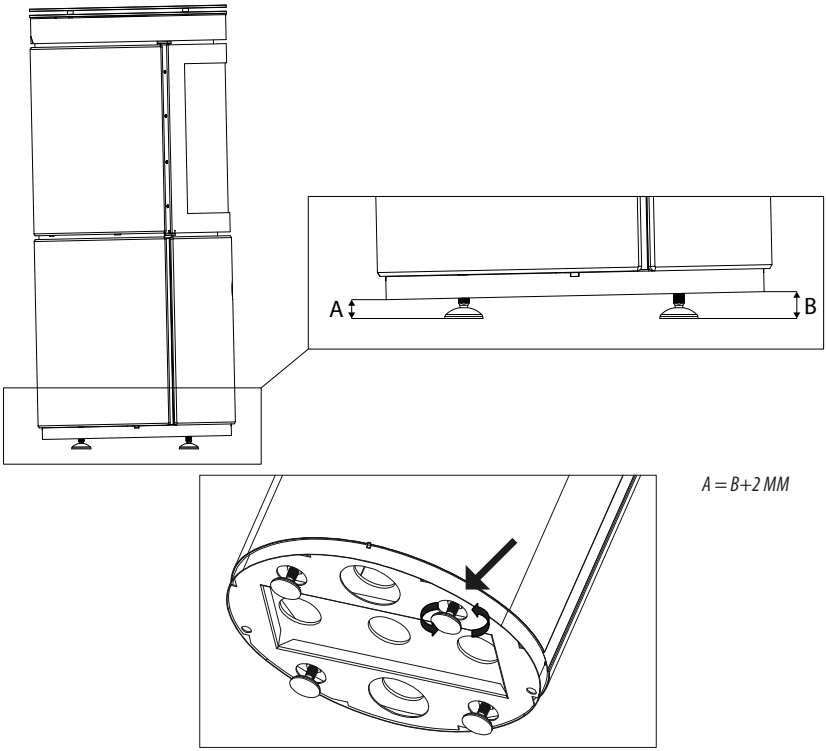

5-CERAMIC KIT PARTS

STUB VERSION WITH TOP SMOKE OUTLET

A	*BOTTOM CERAMIC PANEL*	*G*	*FRAME FOR LEFT SIDE CERAMIC PANEL (B)*
B	*SIDE CERAMIC PANEL*	*H*	*SCREW*
C	*IRON CERAMIC PANEL/FRAME CLAMP SCREWS*	*I*	*SCREW*
D	*SHOULDER RING*	*L*	*TOP*
E	*FRAME FOR BOTTOM CERAMIC PANEL (A)*	*M*	*TOP SUPPORT*
F	*FRAME FOR RIGHT SIDE CERAMIC PANEL (B)*		

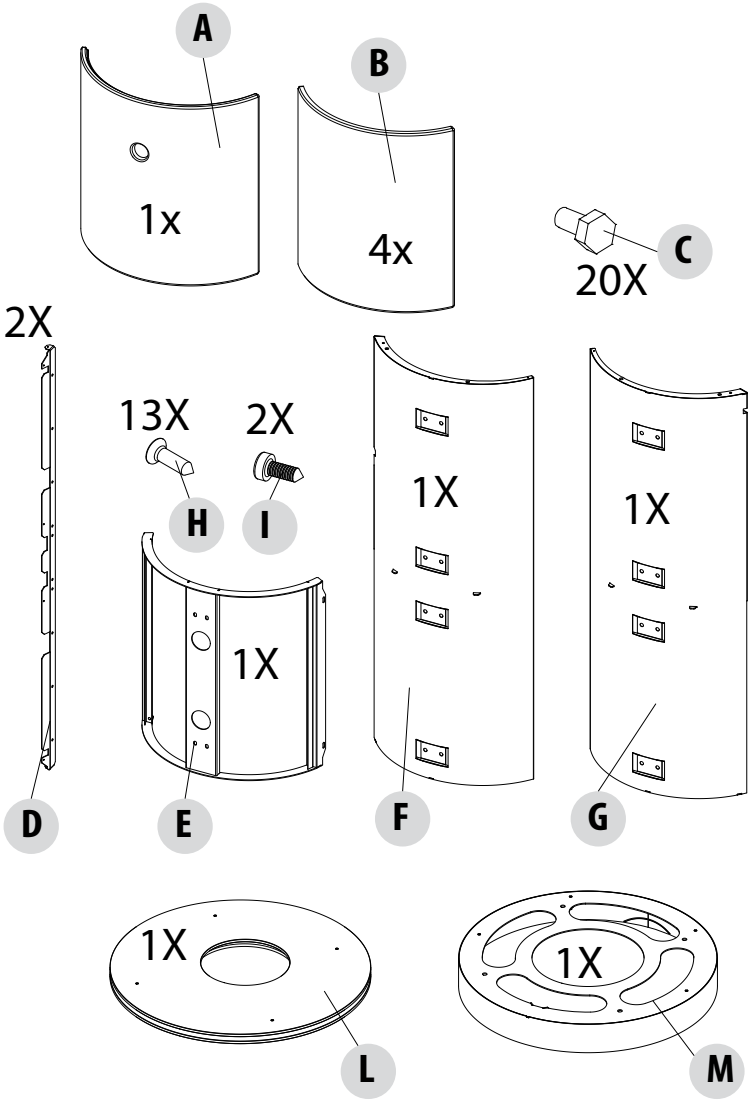

5-CERAMIC KIT PARTS

STUB VERSION WITH REAR COMBUSTION AIR AND/OR REAR SMOKE OUTLET

A	*BOTTOM CERAMIC PANEL*	*G*	*FRAME FOR LEFT SIDE CERAMIC PANEL (B)*
B	*SIDE CERAMIC PANEL*	*H*	*SCREW*
C	*IRON CERAMIC PANEL/FRAME CLAMP SCREWS*	*I*	*SCREW*
D	*SHOULDER RING*	*L*	*TOP*
E	*FRAME FOR BOTTOM CERAMIC PANEL (A)*	*M*	*TOP SUPPORT*
F	*FRAME FOR RIGHT SIDE CERAMIC PANEL (B)*	*N*	*REAR PANEL*

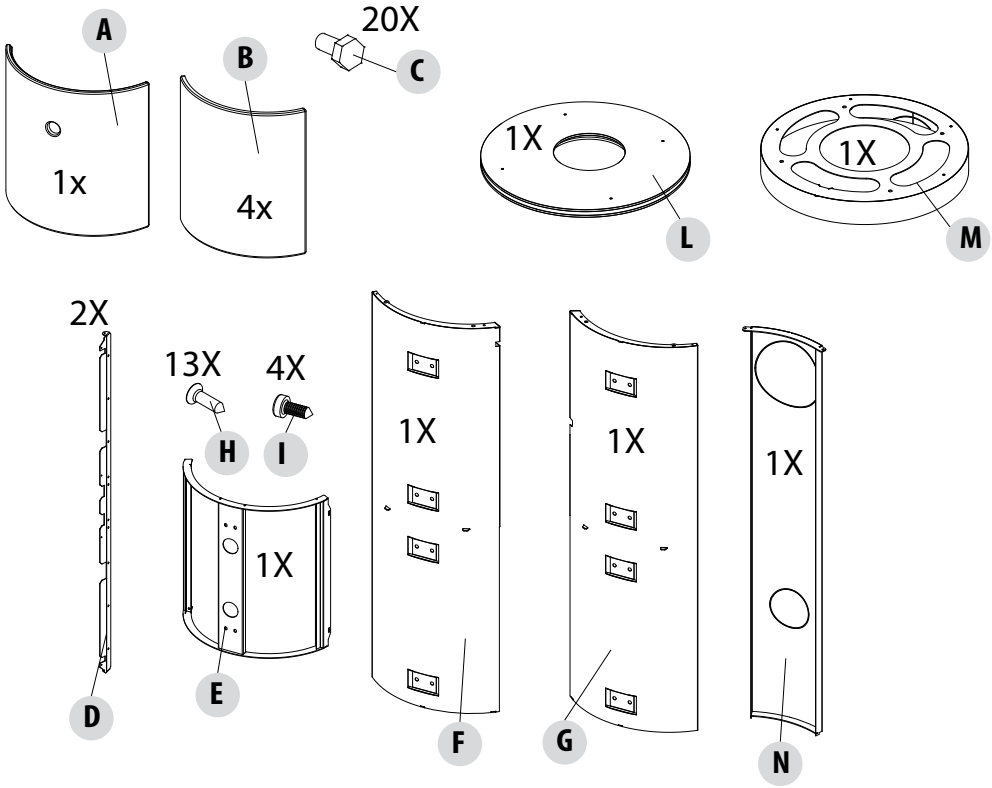

5-CERAMIC KIT PARTS

STUB OVERNIGHT VERSION WITH TOP SMOKE OUTLET AND NON-DUCTED COMBUSTION AIR

A	*BOTTOM CERAMIC PANEL*	*H*	*SCREW*
B	*TOP CERAMIC PANEL*	*I*	*SCREW*
C	*SIDE CERAMIC PANEL*	*L*	*TOP*
D	*IRON CERAMIC PANEL/FRAME CLAMP SCREWS*	*M*	*SCREW*
E	*SHOULDER RING*	*N*	*FRAME FOR RIGHT SIDE CERAMIC PANEL (C)*
F	*FRAME FOR BOTTOM CERAMIC PANEL (A + B)*	*O*	*FRAME FOR LEFT SIDE CERAMIC PANEL (C)*
G	*TOP SUPPORT*		

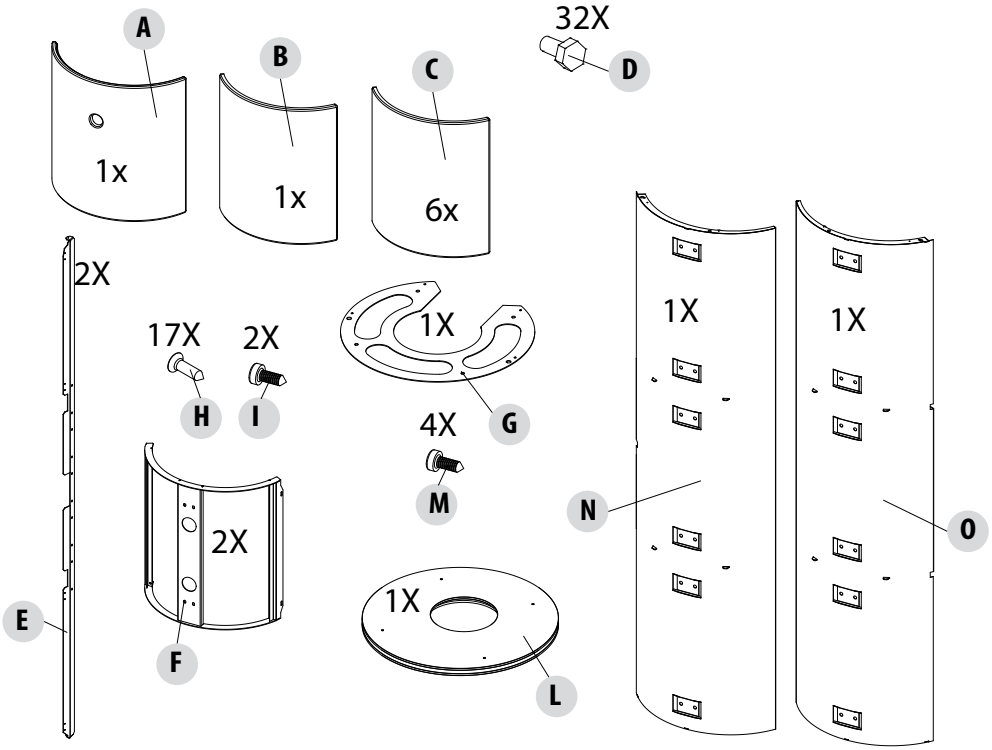

5-CERAMIC KIT PARTS

STUB OVERNIGHT VERSION WITH REAR DUCTED COMBUSTION AIR AND REAR SMOKE OUTLET

A	*BOTTOM CERAMIC PANEL*	*H*	*SCREW*
B	*TOP CERAMIC PANEL*	*I*	*SCREW*
C	*SIDE CERAMIC PANEL*	*L*	*TOP*
D	*IRON CERAMIC PANEL/FRAME CLAMP SCREWS*	*M*	*SCREW*
E	*SHOULDER RING*	*N*	*FRAME FOR RIGHT SIDE CERAMIC PANEL (C)*
F	*FRAME FOR BOTTOM/TOP CERAMIC PANEL (A + B)*	*O*	*FRAME FOR LEFT SIDE CERAMIC PANEL (C)*
G	*TOP SUPPORT*	*P*	*REAR PANEL*

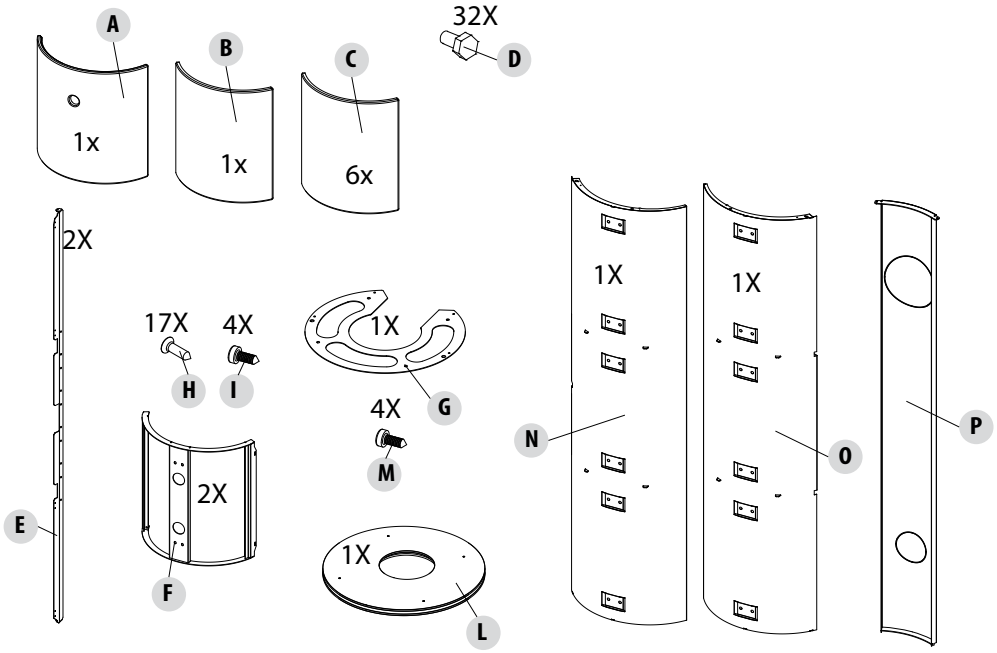

6-STORAGE TANK PARTS AND ASSEMBLY

The storage tank parts are provided with the ceramic kit of the STUB OVERNIGHT stove:

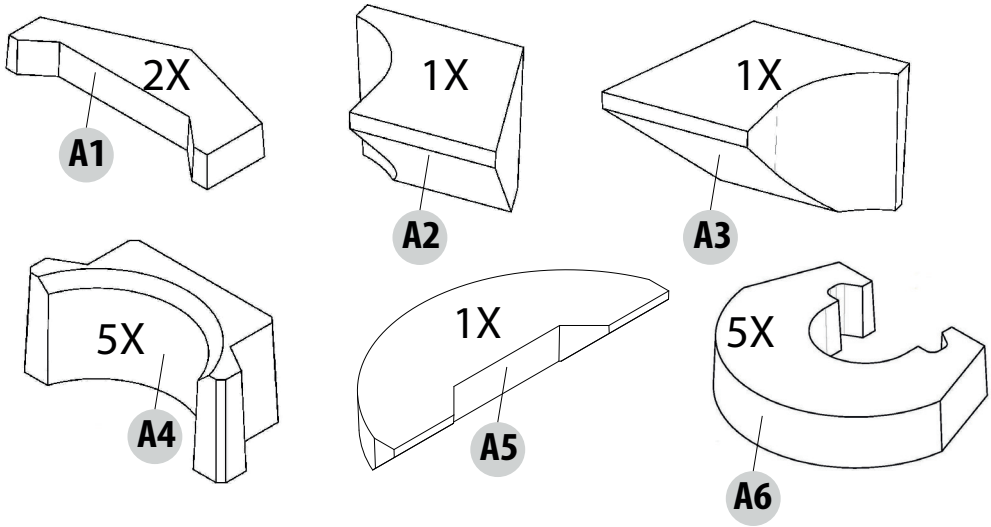

CLADDING ASSEMBLY

Now it is possible to mount the storage tank parts.
The storage tank consists of:

STORAGE TANK	A1	A2	A3	A4	A5	A6
PART NO.	2	1	1	5	1	5

Proceed with the installation as follows:

- place the two parts **A1** on the base of the smoke fitting.
- Place part **A1** on the upper part of item **A5.**
- Place part **A2** (right) and **A3** (left) on elements **A1**.

Place the following on top of these parts, which form the base:

- part **A6** (5 items in all).
- Part **A6** interlocks on part **A4** (5 items in all).

6-STORAGE TANK PARTS AND ASSEMBLY

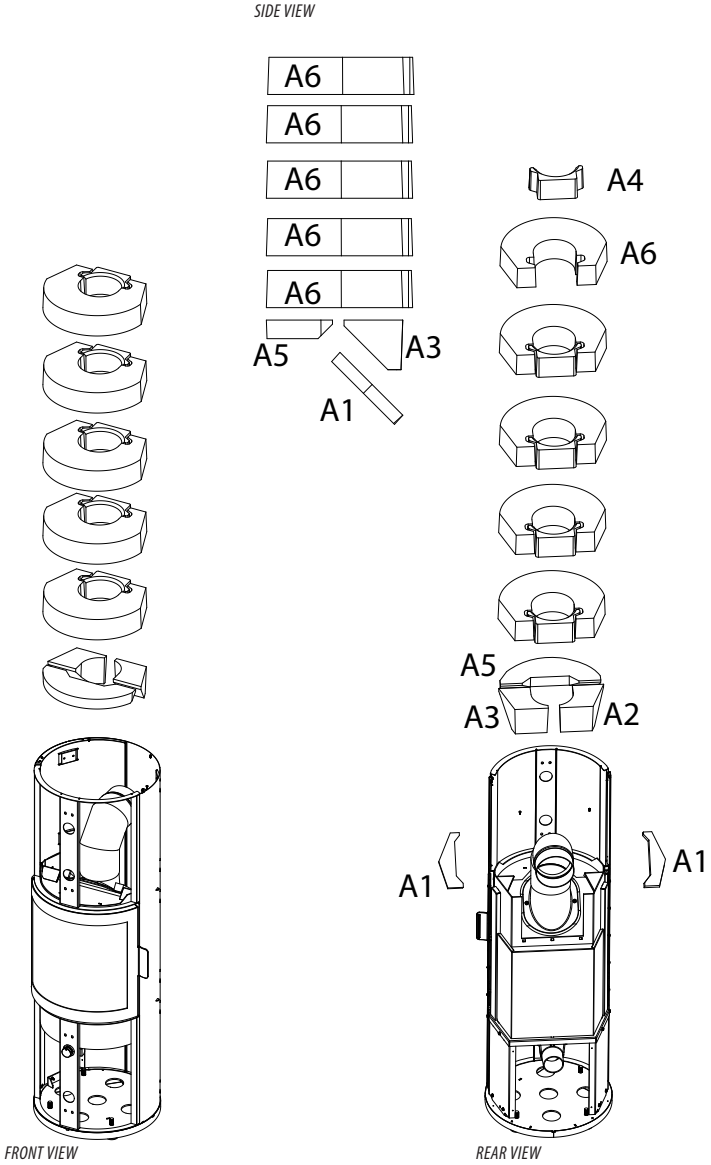

7-STUB COATING ASSEMBLY

COATING ASSEMBLY

Installation of the ceramic side panels does not present any particolar difficulties. The main warning is to install the side panels only when the product has been placed in the chosen premises. Moving the product with the sides assembled might damage the flooring.

STUB VERSION WITH REAR OR UPPER AIR OUTLET

Central panel assembly.

First of all take the two side profiles "**D**" and fix them to the stove structure via the screws supplied "**H**" (four screws on the right and five on the left) FIG.1. Position the ceramic panel "A" on a flat surface, make sure you place a soft cloth underneath it to avoid scratching the ceramic surface. Place the iron frame "E" on top of the ceramic panel and with a slight pressure secure it from the top via the four screws "C" supplied with the ceramic panel "A" (FIG.2).

Once the ceramic has been assembled with the support, carefully make the air adjustment knob pass through the hole on the panel and then bring the ceramic panel closer to the structure (FIG.3). At this point, via the two screws on the right "**H**" and the two screws on the left "**H**", block the panel to the side profile, and then to the stove structure (FIG.4).

IMPORTANT:
When one places the central panel near the structure one must centre the knob with the hole in the panel.

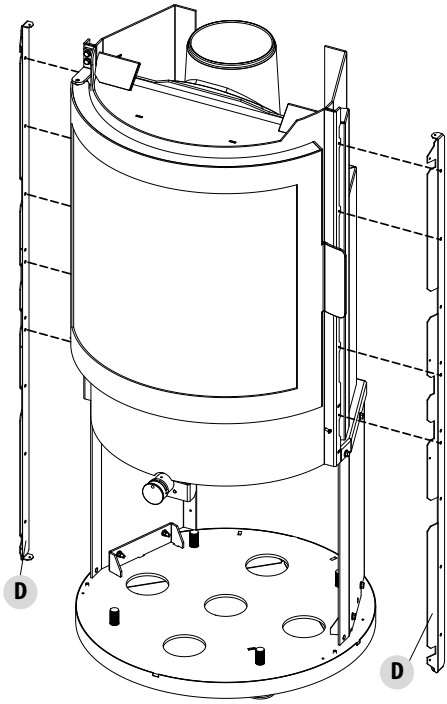

FIG.1 SIDE PROFILES ASSEMBLY

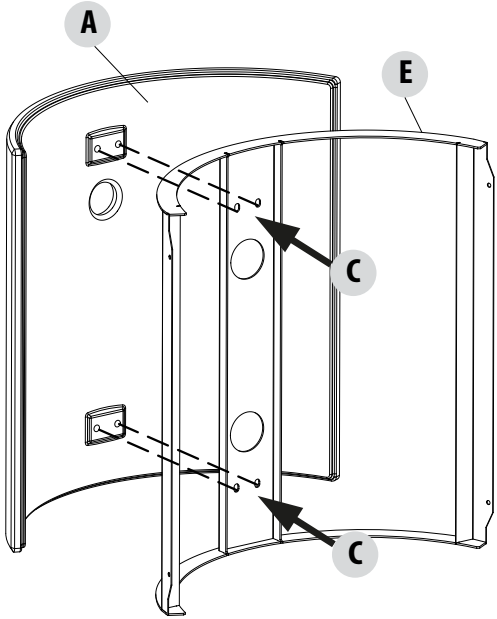

FIG.2 CERAMIC PANEL AND METAL SUPPORT ASSEMBLY

7-STUB COATING ASSEMBLY

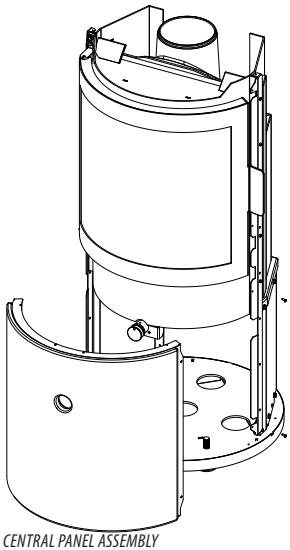

FIG.3 CENTRAL PANEL ASSEMBLY

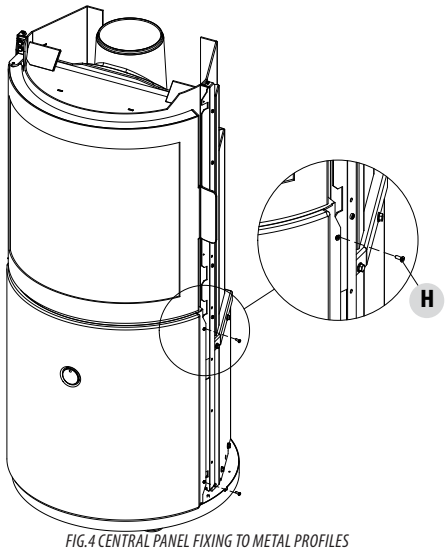

FIG.4 CENTRAL PANEL FIXING TO METAL PROFILES

IMPORTANT:
If the holes used to secure the central panel "A" do not match the ones of the side profiles, try to loosen the screws to position the structure so that it is perpendicular to the base.

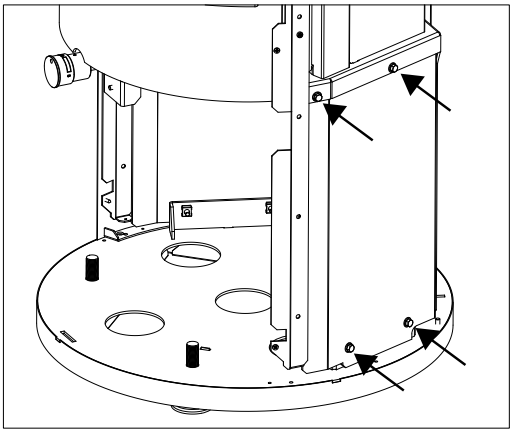

7-STUB COATING ASSEMBLY

Before going ahead with the installation of the side panels, it is necessary to centre and secure the air adjustment knob. Use one hand to hold the knob in axis (at the front) and with the other hand tighten the screw at the back of the stove.

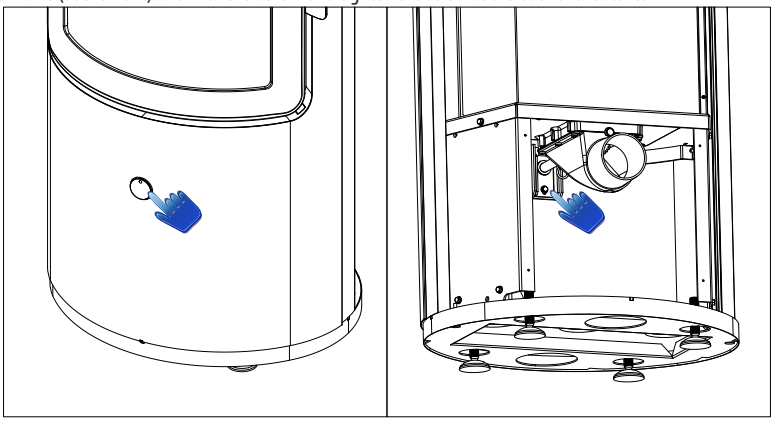

Side panels assembly.

As with the central panel, fix the metal structure "**F/G**" to the ceramic "**B**" via the eight screws "**C**". The metal panel on the handle side has a cut-out (detail A). Position the upper ceramic "**B**" facing with the cut-out (detail B) on the same side as the cut-out of the metal frame and then towards the door opening. While the lower ceramic and the two ceramics on the side opposite the door opening must have the cut-out on the rear part (FIG.5 detail B). After mounting the panels, insert them in the pin S (fig.6) located at the back at the bottom of the

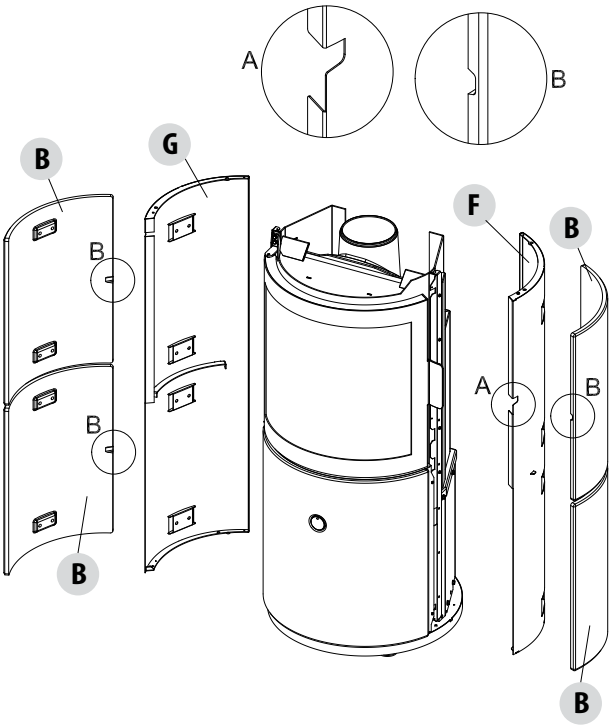

FIG.5 SIDE PANELS ASSEMBLY

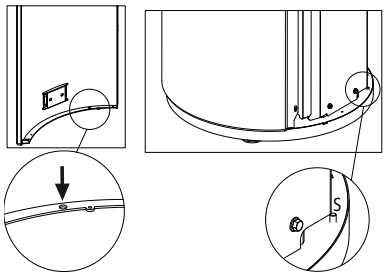

FIG.6 SIDE PANELS ASSEMBLY

stove and secure them at the top with the screw "I" supplied (FIG.7)

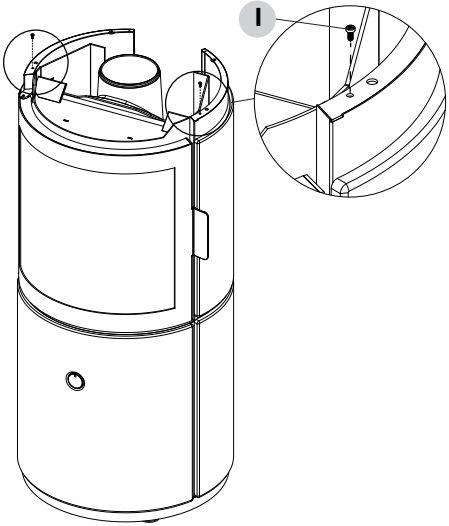

FIG.7 SIDE PANELS UPPER FIXING

Rear panel assembly in the event of rear air outlet.
If there is a top smoke outlet, the two side panels meet at the back and are secured (figure 11) at the top with the two screws "I". For the rear smoke outlet, insert the panel "N" in the joint located at the bottom of the stove (FIG.8-10) and then at the top (FIG.9) fix the rear panel to the two side panels with the two screws "I" supplied. Inserting the top will enable to complete panel assembly.

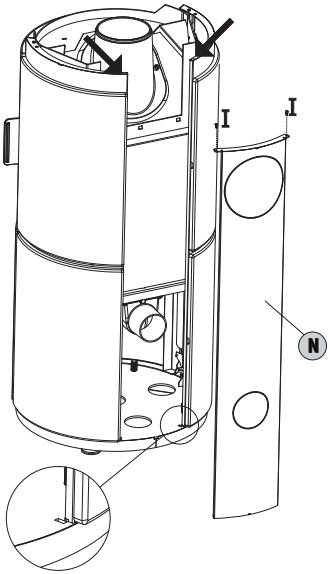

FIG.8 REAR PANEL ASSEMBLY

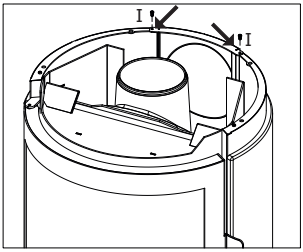

FIG.9 UPPER FIXING

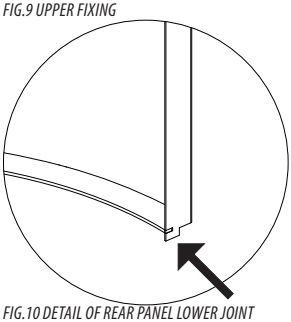

FIG.10 DETAIL OF REAR PANEL LOWER JOINT

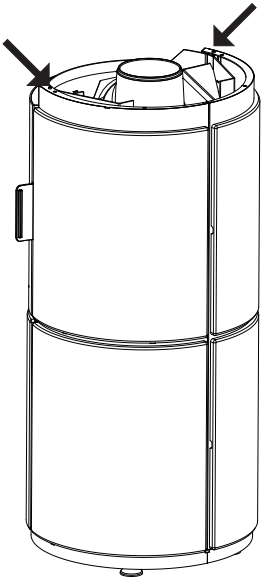

FIG.11 PANEL WITH UPPER AIR OUTLET

8-STUB OVERNIGHT COATING ASSEMBLY

STUB OVERNIGHT VERSION WITH REAR OR TOP SMOKE OUTLET.

Central panel assembly.

First of all take the two side profiles and fix them to the stove structure via the screws supplied (four screws on the right and five on the left) FIG.1. Position the ceramic panel "A" on a flat surface, make sure you place a soft cloth underneath it to avoid scratching the ceramic surface. Place the iron frame "E" on top of the ceramic panel and with a slight pressure secure it from the top via the four screws "D" supplied with the ceramic panel "A" (FIG.2).

Once the ceramic has been assembled with the support, carefully make the air adjustment knob pass through the hole on the panel and then bring the ceramic panel closer to the structure (FIG.3). At this point, via the two screws on the right "**H**" and the two screws "**H**" on the left, block the panel to the side profile, and then to the stove structure FIG.4. For the upper central panel carry out the same procedure (frame "**F**"/ceramic "**B**" assembly and fixing to the stove profile with two screws on the right "**H**" and two screws on the left "**H**").

IMPORTANT:
When one places the lower central panel near the structure one must centre the knob with the hole in the panel.

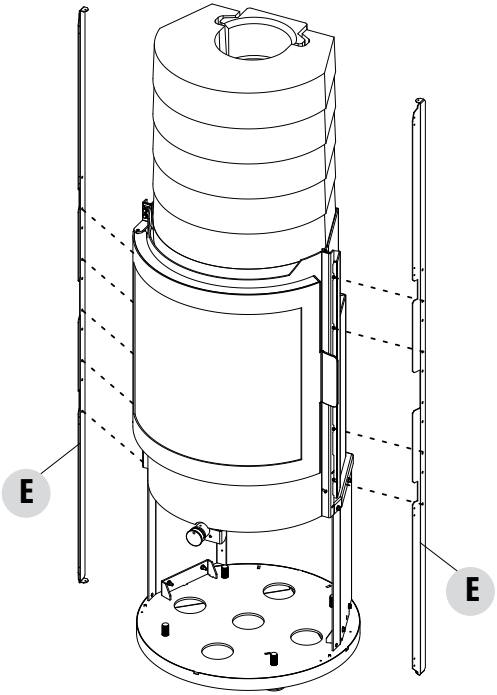

FIG.1 SIDE PROFILES ASSEMBLY

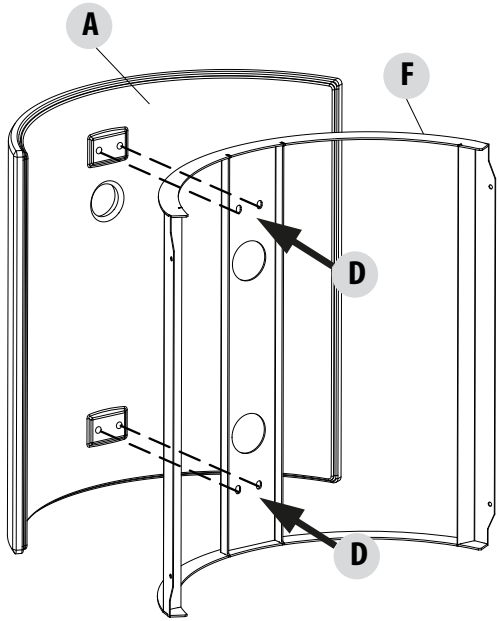

FIG.2 CERAMIC PANEL AND METAL SUPPORT ASSEMBLY

8-STUB OVERNIGHT COATING ASSEMBLY

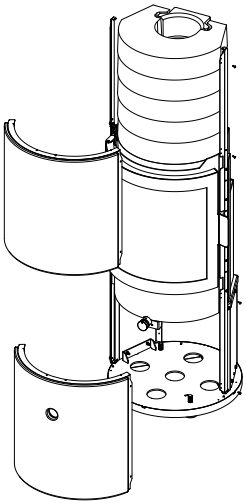

FIG.3 CENTRAL PANEL ASSEMBLY

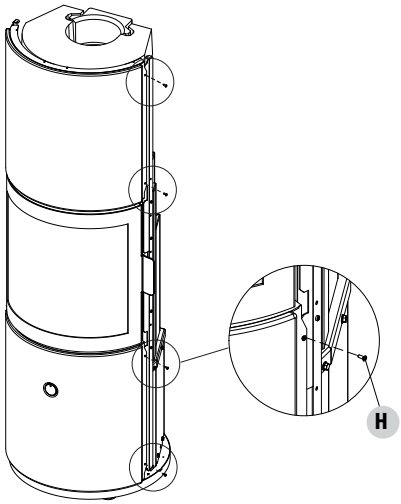

FIG.4 CENTRAL PANEL FIXING TO METAL PROFILES

IMPORTANT:
If the holes used to secure the central panel "A" do not match the ones of the side profiles, try to loosen the screws to position the structure so that it is perpendicular to the base.

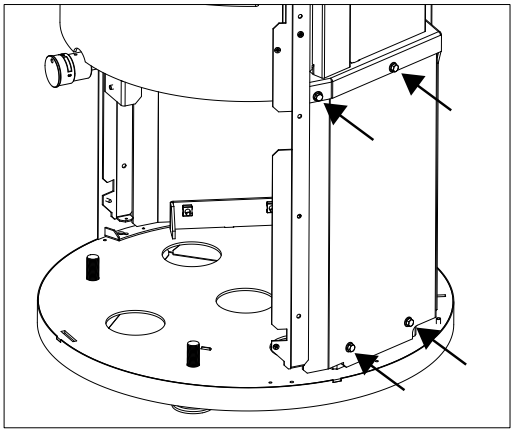

8-STUB OVERNIGHT COATING ASSEMBLY

Before going ahead with the installation of the side panels, it is necessary to centre and secure the air adjustment knob. Use one hand to hold the knob in axis (at the front) and with the other hand tighten the screw at the back of the stove.

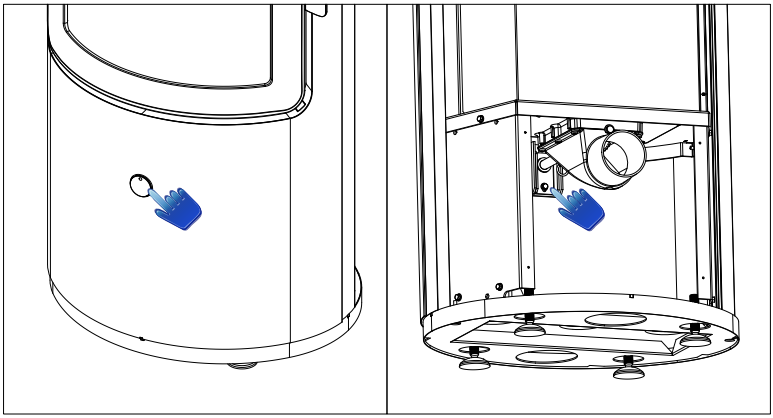

Side panels assembly.

As with the central panel fix the metal frame "**N/O**" to the three ceramics "**C**" per side via the screws "**D**" (see pages related to the "ceramic kit parts"). The metal panel "**N**" on the handle side has a cut-out (detail **A**). Position the intermediate ceramic "**C**" facing with the cut-out (detail **B**) on the same side as the cut-out of the metal frame "**N**" and then towards the door opening. While the lower "**C**" and upper ceramic "**C**" and the three ceramics on the side opposite "**C**" the door opening must have the cut-out on the rear part (FIG.5 detail B). After mounting the panels, insert them in the pin S (fig.6) located at the bottom of the stove, at the back.

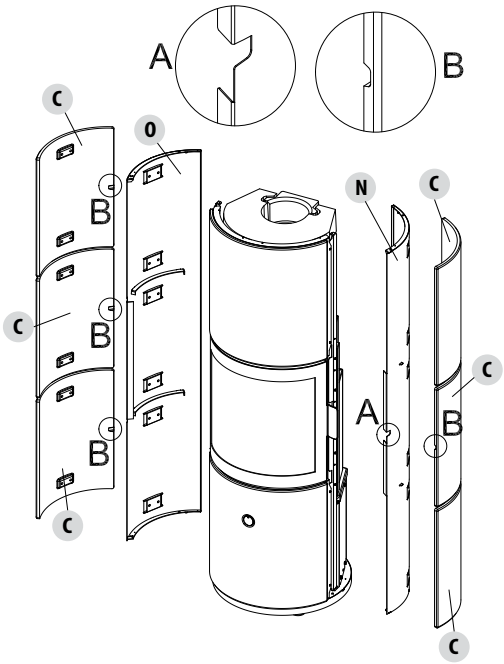

FIG.5 SIDE PANELS ASSEMBLY

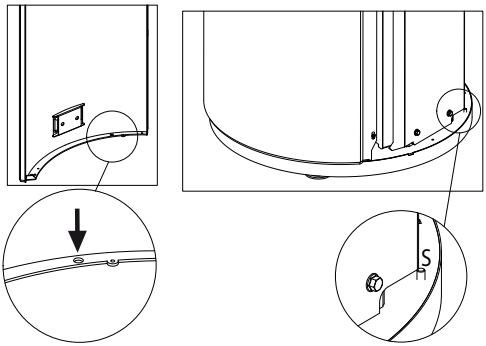

FIG.6 SIDE PANELS ASSEMBLY

8-STUB OVERNIGHT COATING ASSEMBLY

At the top, fix the panels to the structure with the screws "I" supplied (FIG.7).

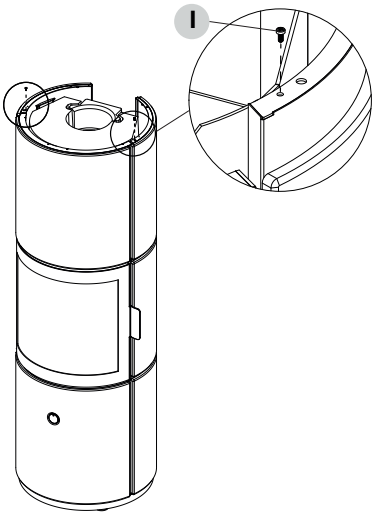

FIG.7 SIDE PANELS UPPER FIXING

Rear panel assembly in the event of rear air outlet.
If there is a top smoke outlet, the two side panels meet at the back and are secured (figure 11) at the top with the two screws "I". For the rear smoke outlet, insert the panel "P" in the joint located at the bottom of the stove (FIG.8-10) and then at the top (FIG.9) fix the rear panel to the two side panels with the two screws "I" supplied.
Inserting the top will enable to complete panel assembly.

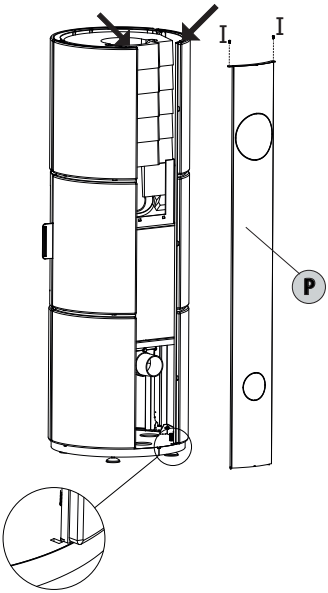

FIG.8 REAR PANEL ASSEMBLY

FIG.9 UPPER FIXING

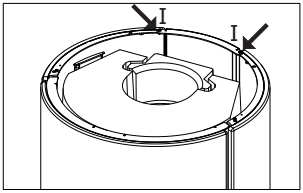

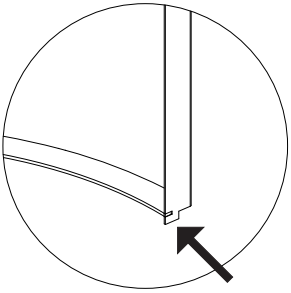

FIG.10 DETAIL OF REAR PANEL LOWER JOINT

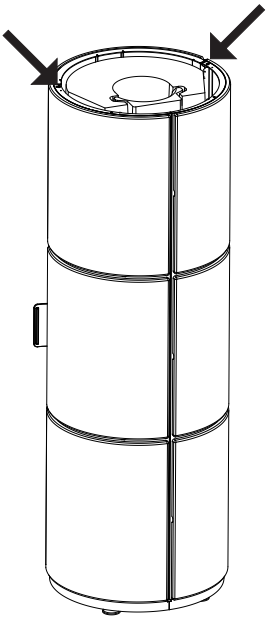

FIG.11 PANEL WITH UPPER AIR OUTLET

9 - ASSEMBLING THE TOP

STUB STOVE WITH UPPER OR REAR AIR OUTLET

Place the top support "M" on the stove, make sure the pins S underneath the top support go into the holes on the frame C of the side ceramic panels and that the spacer "K" is positioned towards the door of the stove and is resting against the structure (see detail on the next page). Then take the top "L" and place it on top of the top support "M". Again, make sure the pins S match with the holes. In the case of a rear smoke outlet, it is possible to cover the hole on the top B with the designated hole-cover (optional).

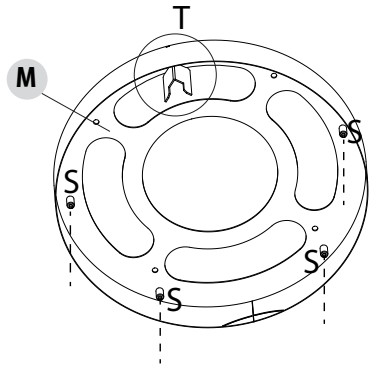

M TOP SUPPORT

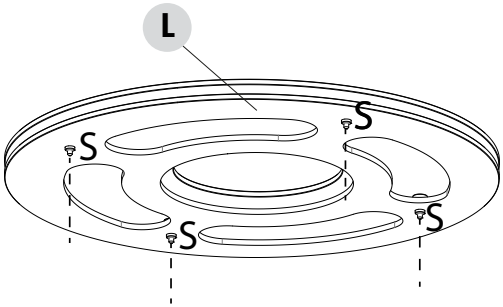

L TOP

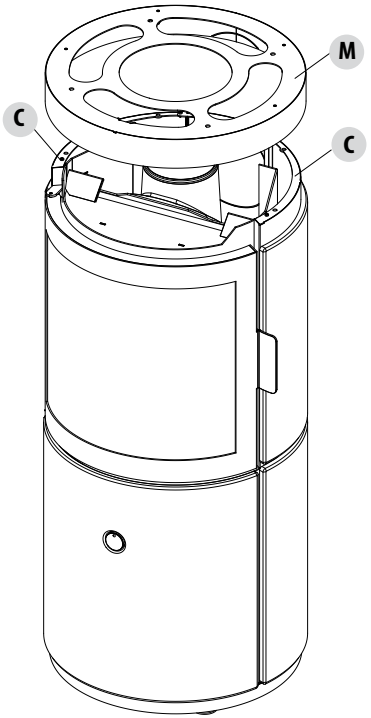

M TOP SUPPORT ASSEMBLY

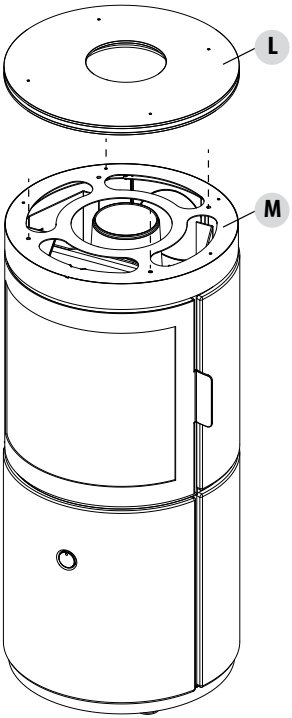

L TOP ASSEMBLY

K DETAIL

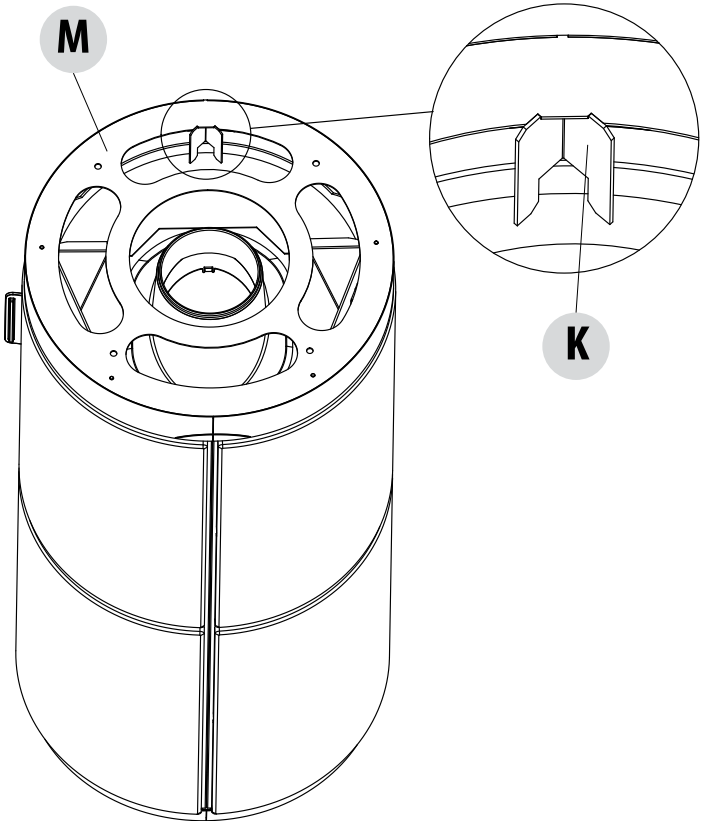

9 - ASSEMBLING THE TOP

STUB OVERNIGHT STOVE WITH TOP OR REAR SMOKE OUTLET

Fix top support **"G"** to the structure via the four screws **"M"**. Then take top **"L"** and making sure that pins **S** placed under cover **B** enter the holes of top support **"G"**. In the case of rear smoke outlet cover the hole with hole cover **"C"** (optional).

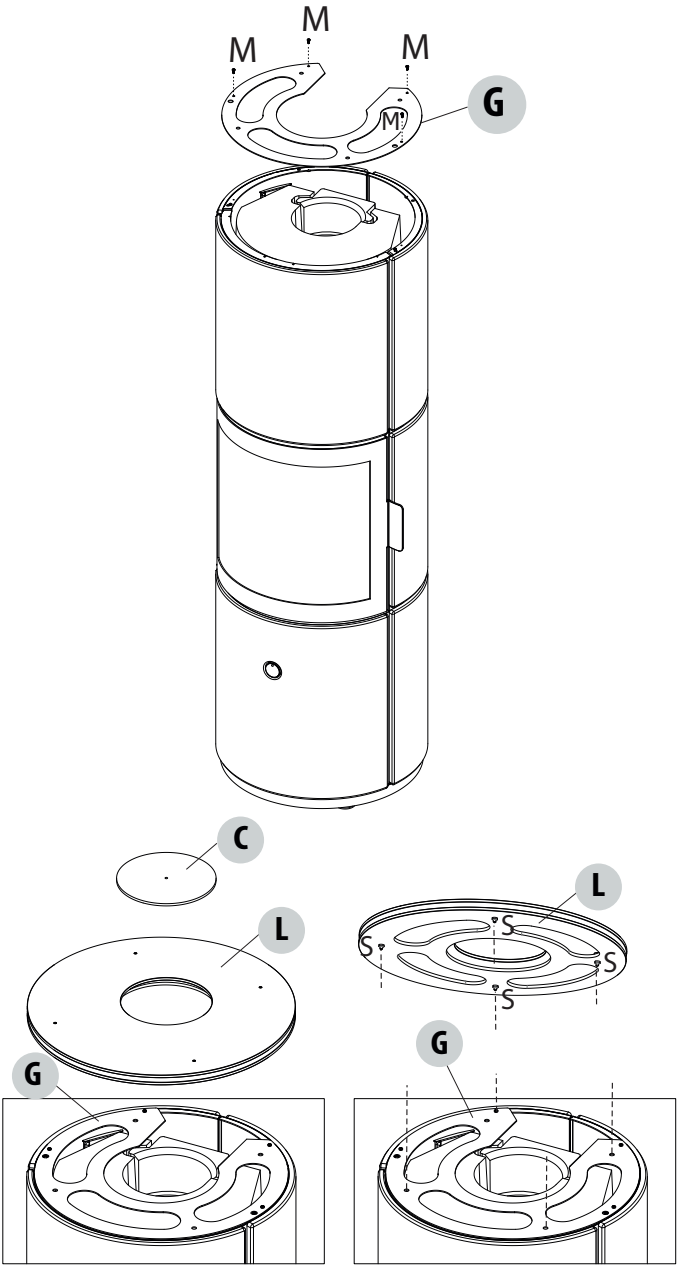

10-OPERATION

START-UP PRECAUTIONS

Make sure you have read and fully understood the contents of this instruction manual.
Remove all components that could burn from the firebox and door (instructions and various adhesive labels).
Remove the stickers from the ceramic glass otherwise the high temperature could melt them and cause irreparable damage to the glass.
The product can be positioned at an angle or against the wall.

Avoid touching the product during the initial start-up, as the paint completes its drying process and hardens during this phase. It is good practice to guarantee effective ventilation in the room during the initial start-up, as the product will emit some smoke and smell of paint, which is absolutely normal!
If necessary, touch up the paint with the spray can of the specific colour.

Do not stand close to the product and air the room. The smoke and smell of paint will disappear after about an hour of operation, however, remember they are not harmful in any case.

The product will be subject to expansion and contraction during the start-up and cooling phases, therefore light creaking noises may be heard.
This is absolutely normal as the structure is made of laminated steel and must not be considered a defect.

It is extremely important to make sure the product is not immediately overheated and the temperature increases gradually.
This will prevent damaging the welds and the steel structure.
Do not expect heating efficiency immediately!

FUEL

FUEL: WOOD

In order to achieve maximum efficiency from your product, it is of utmost importance to use wood with adequate characteristics.
One can use wood for heating such as **oak-beech-ash-robinia-durmast** wood or uncoated pressed wood logs. **The latter have a high calorific value and must be used with caution to avoid overheating that could damage the product.**Fuels such as poplar-pine-linden-chestnut have a low calorific value as the wood is soft. The humidity content is fundamental for all types of wood.

Wood drying time (e.g. beech)	**Moisture %**	**Calorific value Kcal/h**
Freshly cut	50	/
3 Months	40	2410
6 Months	35	2700
9 Months	30	2900
12 Months	25	3150
15 Months	20	3400
18 Months	15	3710
21 Months	10	3980

10-OPERATION

A high percentage of moisture causes condensation in the smoke duct, thereby causing an alteration to the draught and generating smoke and considerable soot deposits in the firebox, on the glass of the door and on the product, with the subsequent risk of this catching fire. It also leads to a much lower overall efficiency.

The use of humid or treated wood releases a greater amount of smoke than usual, which could dirty the glass more quickly. Poor chimney performance can also compromise the cleanliness of the glass, as the smoke remains in the combustion chamber longer than usual.

Do not use treated fuels (painted or lacquered wood) or non-compliant fuels (plastic or derivatives), which could release toxic substances or pollutants.
Do not burn waste.
The gases produced by combustion of unsuitable fuel could damage the product and pollute and compromise your health.

USING THE STOVE

OPENING/CLOSING THE DOOR

The product is equipped with an automatic door closing system. Using the leather glove supplied, pull the door towards you and the door opens. To close it simply let go and the door will close automatically.
NOTE: for the door closing system to work properly, the product must be installed according to the feet adjustment guidelines in Chap. 4.

FUEL LOADING

To load the fuel, simply open the door by pulling the handle and pulling the door towards you.
The metal parts and the glass become very hot during operation, therefore use adequate protection.
The door to the combustion chamber must remain closed during combustion.

It is forbidden to load larger quantities of fuel than those specified in the technical datasheets of each individual product.
An excessive amount of fuel in the combustion chamber could damage and deform the firebox and the structure of the product.
The company cannot be held liable for any damage caused by fuel overloads or if non-compliant fuel is used.

COMBUSTION CONTROL

Combustion adjustment and therefore the combustion air intake is controlled via a single control knob.
The inlet air is either:
PRIMARY AIR:
the primary air is pre-set and is mainly delivered to help the ignition process of the product.
SECONDARY AIR:
emission of secondary air is predetermined, and is used for the partial cleaning of the glass and allows the completion of the combustion process. Thanks to this process, heating performance and efficiency of the product are enhanced.

ADJUSTING THE AIR WITH THE PUSH-PULL SYSTEM

Press the air adjustment knob, which will slightly emerge from its seat thanks to a spring and it can then be turned to the left or right according to the increase or decrease in combustion air that is to enter the combustion chamber.
The primary and secondary air intake is pre-set; the primary and secondary air intake is adjusted automatically by moving the knob.
Once the adjustment is complete, the knob is pressed once again for it to enter its seat.

AIR ADJUSTMENT KNOB IN POSITIONS 2

POSITIONS 1-2-3 AIR ADJUSTMENT KNOB

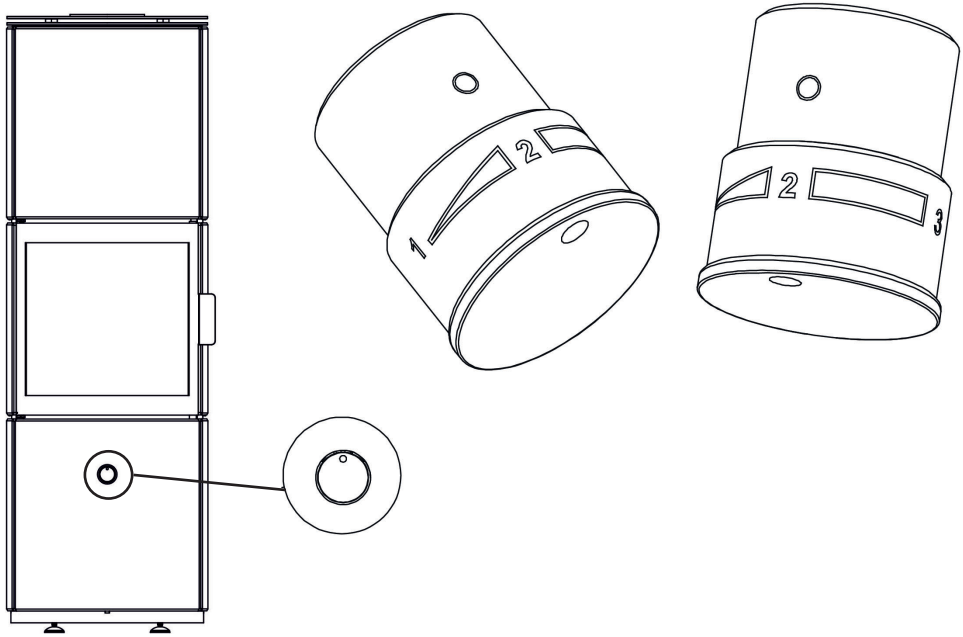

PRIMARY AIR KNOB (TURNED TO THE LEFT)

The knob turned to the left (i.e. counter-clockwise) in pos. 3 is designed to bring a large amount of air into the firebox, to allow a rapid and effective ignition of the fire.

SECONDARY AIR KNOB (IN POSITION 2)

Secondary air, as mentioned above, allows the combustion process to be completed and enhances efficiency (knob in pos. 2).
The position of the knob determines the nominal output, thereby minimising the primary and secondary air intake.

KNOB TURNED TO THE RIGHT

Turn the knob clockwise to position 1 in order to decrease the amount of air in the combustion chamber as only a minimum amount of primary air is drawn.
This position is used to prolong combustion (for instance, at night, or when you are not at home) so that the product is set to minimum, the fire is kept on while achieving savings on fuel.

10-OPERATION

FIRST IGNITION

A NOTE REGARDING PAINT EXHALATION

It is recommended to air the room before the first start-up to evacuate any smells and/or fumes emitted by the paint during the drying and hardening phase due to the heat.

Do not stand close to the stove and as mentioned, air the room. The smoke and smell of paint will disappear after about an hour of operation, however, remember they are not harmful in any case.

It is recommended to first start-up the product using fine and seasoned wood.
The combustion air inlet must be completely open. When combustion has started up, normal sized wood can be introduced.
Each time the wood is loaded, the door must be opened slowly to prevent smoke blow back in the room.
Proceed as follows:

- place a small ball of scrunched up paper into the product.
- Cover the paper with a few twigs and a few pieces of wood.
- Turn the lever completely to the left (pos. 3).
- Light the paper and if necessary keep the door ajar for a few minutes until the combustion chamber and the flue begin to warm up.
- The door can be closed once the twigs start to burn.

As the fire gradually burns, add wood. Never overload the product with wood (see the technical data in the table).
As soon as the flames have died down and a bed of embers has formed, load the product normally.
Small loads are preferable to large loads of wood for combustion.
It is recommended to adopt this fuel loading method also in subsequent product use.

To achieve the nominal output and optimal combustion, load the amount of wood and comply with the loading interval indicated in the technical data table (Chapter 3).

11-MAINTENANCE AND CLEANING

All the cleaning operations of all parts must be performed with a completely cold product.

CLEANING PERFORMED BY THE USER

CLEANING THE GLASS

The glass can be cleaned with specific products (see our price list), with a cloth soaked in a water and ammonia solution or a little white ash and a sheet of newspaper. Any soot build-up and dirt will prolong cleaning time.

Do not spray the product onto the painted parts or onto the door gaskets (ceramic fibre cord).

The ceramic glass installed on the manufacturer's products have a heat resistance of approximately 750 °C and are tested and checked before and after assembly to check for any cracks, bubbles and swelling.
Despite the high resistance to temperatures, the glass is in any case a fragile element and so it is advisable to handle the door carefully without slamming it or forcing it. Since it is not a flexible element, the glass may break.
Moreover, this type of glass does not shatter or burst and should it break, for the above reasons, only a crack will form.

CLEANING THE UPPER CALORITE DEFLECTORS

They do not require any special care. Even though the internal deflectors of the combustion firebox are made of effective yet porous material, they must be replaced after prolonged use due to wear, damage caused when their thickness is reduced to half or broken.

CLEANING THE ASH

This task must be performed with the stove turned off; we recommend you clean the ash tray thoroughly to ensure correct combustion.
Open the door, remove the grille and the ash pan using the supplied cold handle.
Clean also any ash deposits in the pan compartment.
Hot ashes must not be stored outside unsupervised or thrown into the rubbish bin. Allow it to cool in the open air in a metal container.

11-MAINTENANCE AND CLEANING

CLEANING STAINLESS STEEL AND SATIN-FINISHED SURFACES

Usually these surfaces do not need any special treatment and avoiding cleaning them with abrasive materials is sufficient. For stainless and matt steel surfaces, we recommend you clean these with a paper towel or a dry, clean cloth dipped in detergent made with non ionic surfactants (<5%); spray glass and mirror cleaner is recommended.

CLEANING PAINTED PARTS

Avoid cleaning the painted parts when the product is in operation or hot, with damp cloths to avoid the thermal shock of the paint and its consequent detachment. Do not use abrasive or aggressive materials or products. Clean with a paper towel or damp cotton.

The silicone paints used to coat the products have top quality technical properties that allow for resistance to very high temperatures.
There is however a physical limit (380°-400°) beyond which the paint loses its characteristics and begins to "whiten" or (above 450°) "vitrifies" and can flake and peel away from the steel surface. If this occurs, it means that temperatures well above those at which the appliance should operate correctly have been reached and consequently we recommend the use of the quantity of fuel specified in the technical tables.

CLEANING THE CHIMNEY

Mechanical cleaning of the chimney is mandatory at least once a year; excessive unburned waste can cause problems when the smoke is expelled and start a fire in the flue itself.

CLEANING TO BE PERFORMED BY QUALIFIED PERSONNEL

ATTENTION:
the frequency with which the product is to be cleaned is based on its use and the type of installation.
The company recommends contacting an authorised service centre for end-of-season maintenance and cleaning to be performed on the entire flue system as the above-mentioned operations will be performed together with a general inspection of the product.

QUICK RESPONSE

If for any reason the fire in the combustion chamber must be put out suddenly and quickly or a fire has ignited in the product, act as follows:

- time permitting, remove the embers and ashes using a metal container.
- Request immediate help from the relative organisations.

MCZ GROUP S.p.A.
Via La Croce n°8
33074 Vigonovo di Fontanafredda (PN) – ITALY
Telephone: 0434/599599 r.a.
Fax: 0434/599598
Internet: www.mcz.it
e-mail: mcz@mcz.it

8901227200 REV.2 12/06/2019